8. Level 3 Repair

8-1. Block Diagram

SM-B312EH Block Diagram

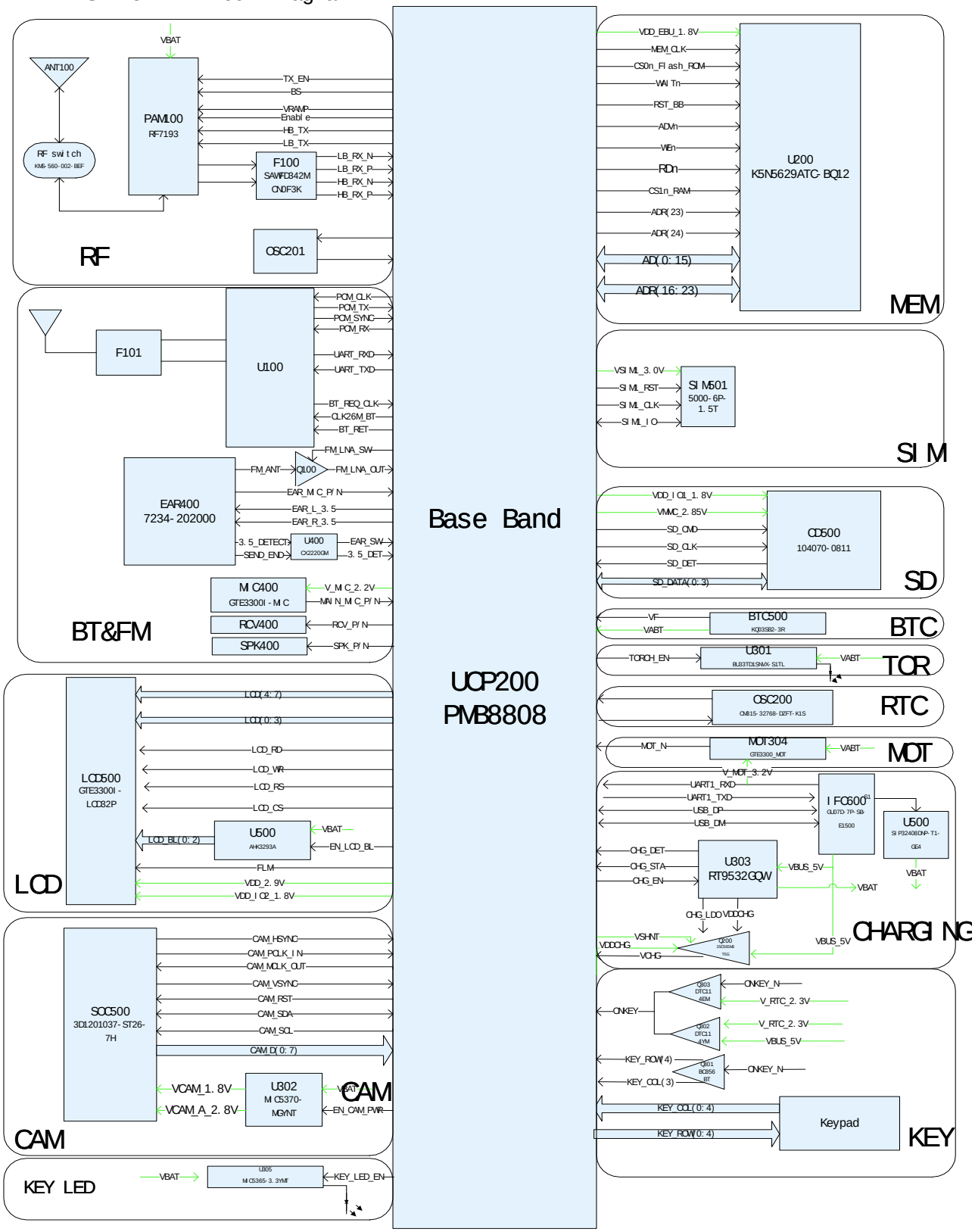

Confidential and proprietary-the contents in this service guide subject to change without prior notice.
Distribution, transmission, or infringement of any content or data from this document without Samsung's written authorization is strictly prohibited.

8-2. PCB Diagrams

8-2-1. Top

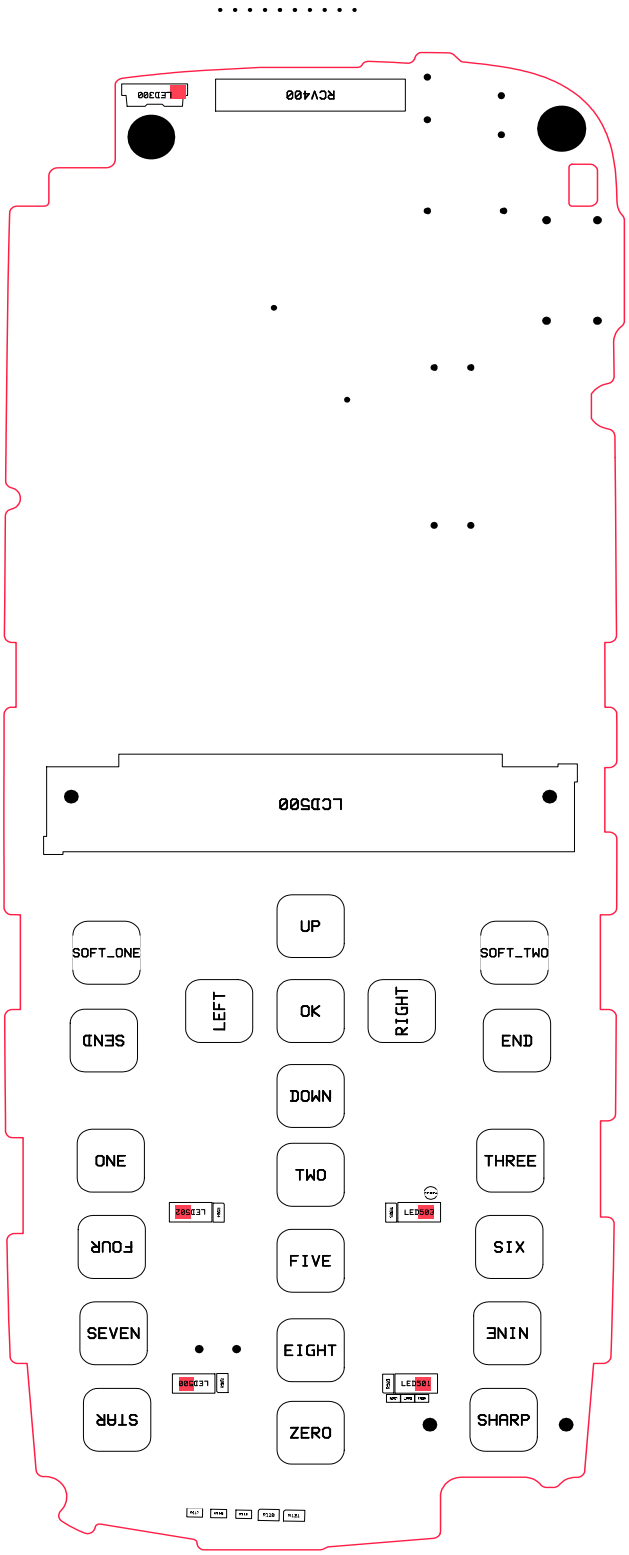

Confidential and proprietary-the contents in this service guide subject to change without prior notice.
Distribution, transmission, or infringement of any content or data from this document without Samsung's written authorization is strictly prohibited.

8-2-2. Bottom

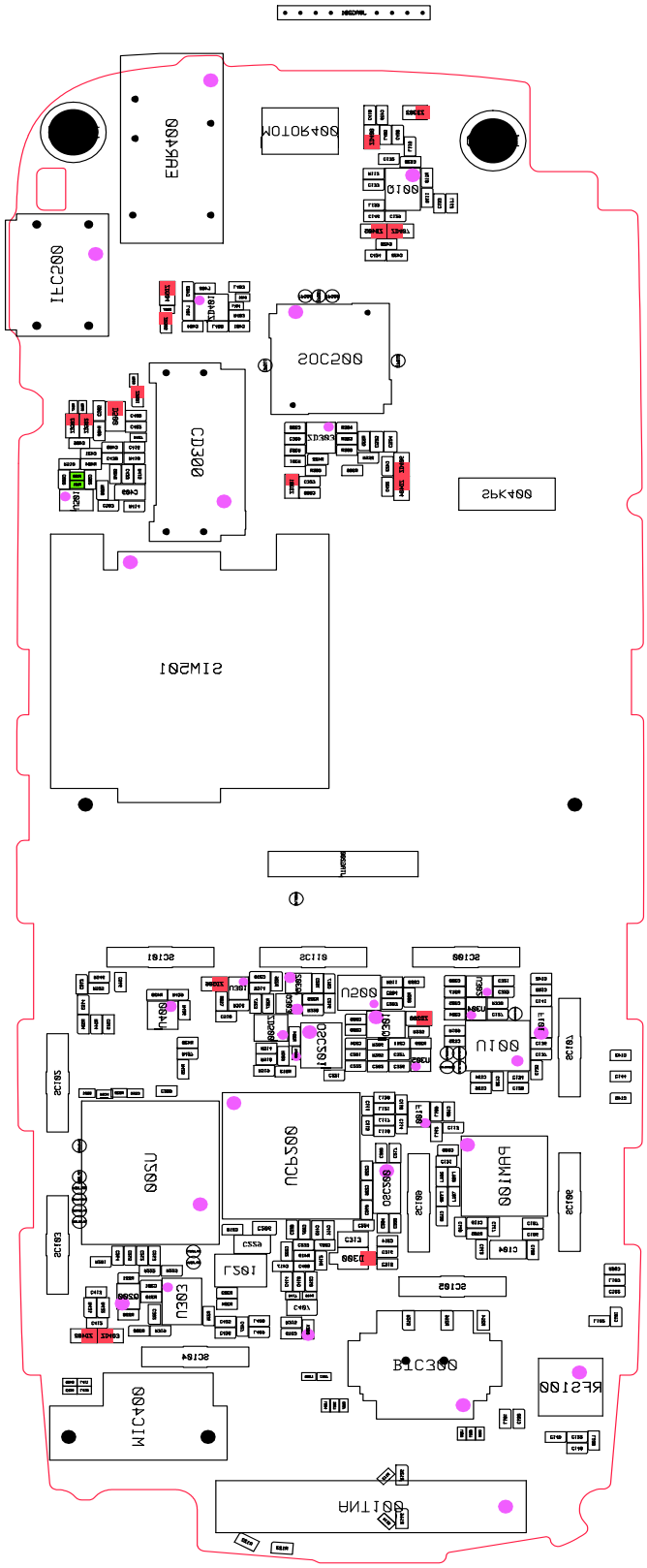

Confidential and proprietary-the contents in this service guide subject to change without prior notice.
Distribution, transmission, or infringement of any content or data from this document without Samsung's written authorization is strictly prohibited.

8-3. Troubleshooting

Equipments

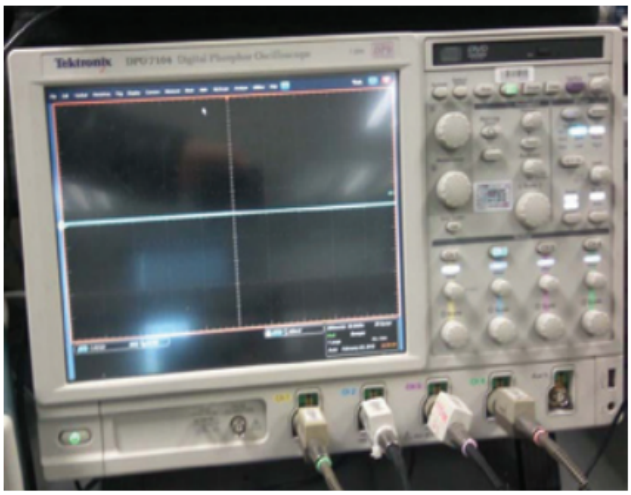

↑ Oscilloscope

↑ Digital Multimeter

↑ Power Supply

↑ + driver, ESD Safe Tweezer

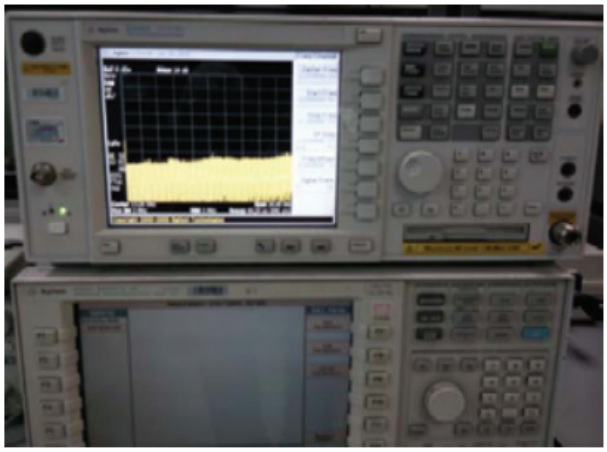

↑ 8960 & Spectrum Analyzer

↑ Soldering iron

Confidential and proprietary-the contents in this service guide subject to change without prior notice.
Distribution, transmission, or infringement of any content or data from this document without Samsung's written authorization is strictly prohibited.

8-3-1. LOGIC part
8-3-1-1. POWER ON

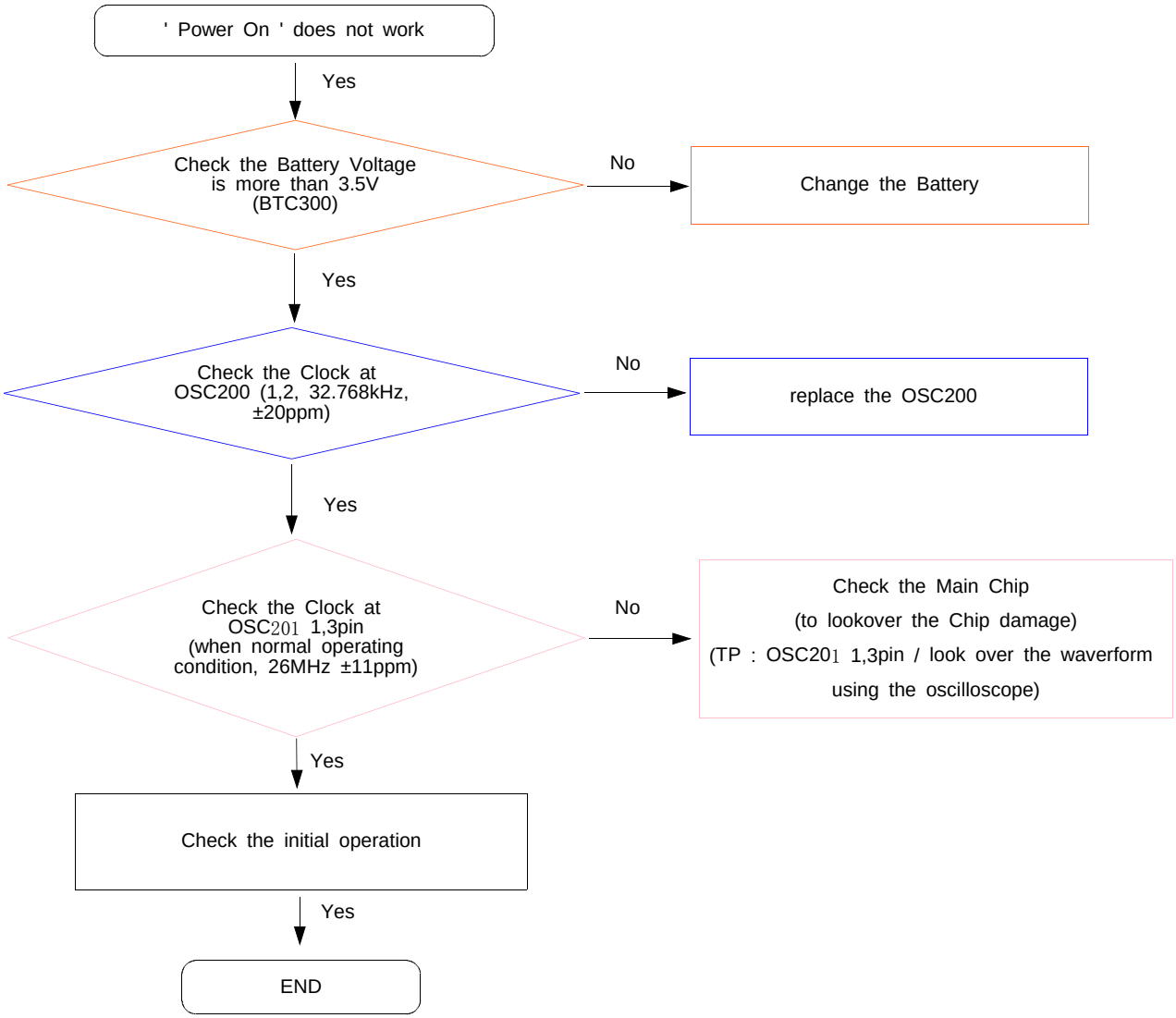

Confidential and proprietary-the contents in this service guide subject to change without prior notice.
Distribution, transmission, or infringement of any content or data from this document without Samsung's written authorization is strictly prohibited.

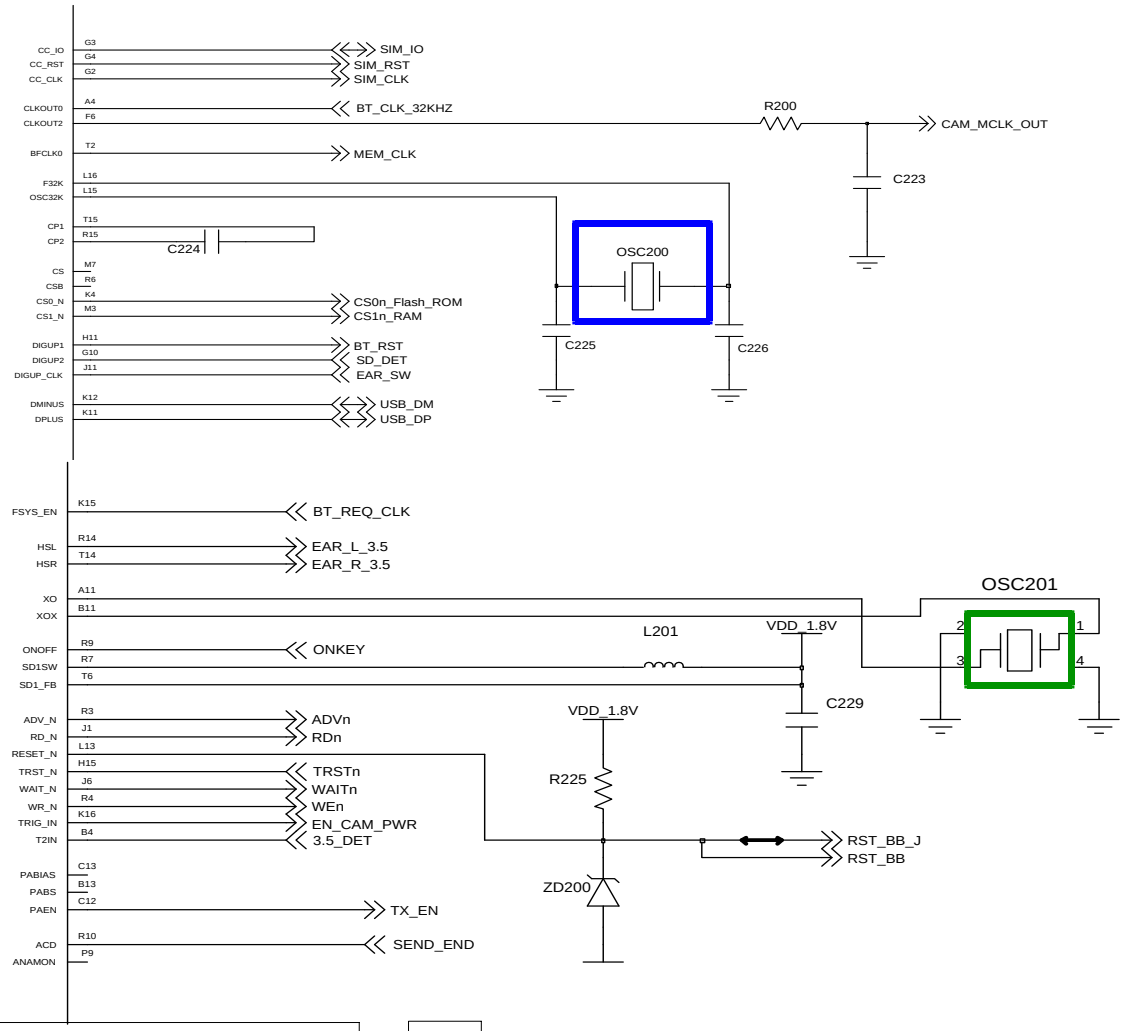

Confidential and proprietary-the contents in this service guide subject to change without prior notice.
Distribution, transmission, or infringement of any content or data from this document without Samsung's written authorization is strictly prohibited.

8-3-1-2. LCD Part

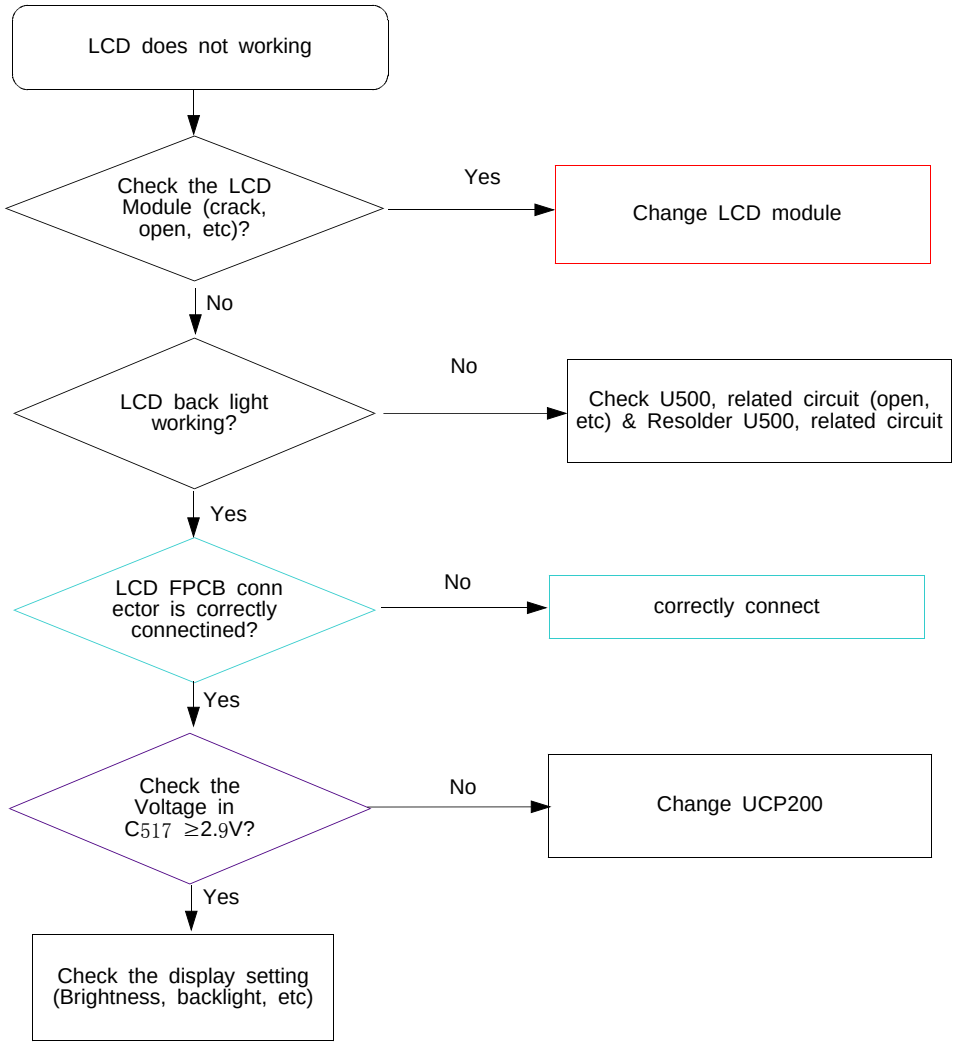

Confidential and proprietary-the contents in this service guide subject to change without prior notice.
Distribution, transmission, or infringement of any content or data from this document without Samsung's written authorization is strictly prohibited.

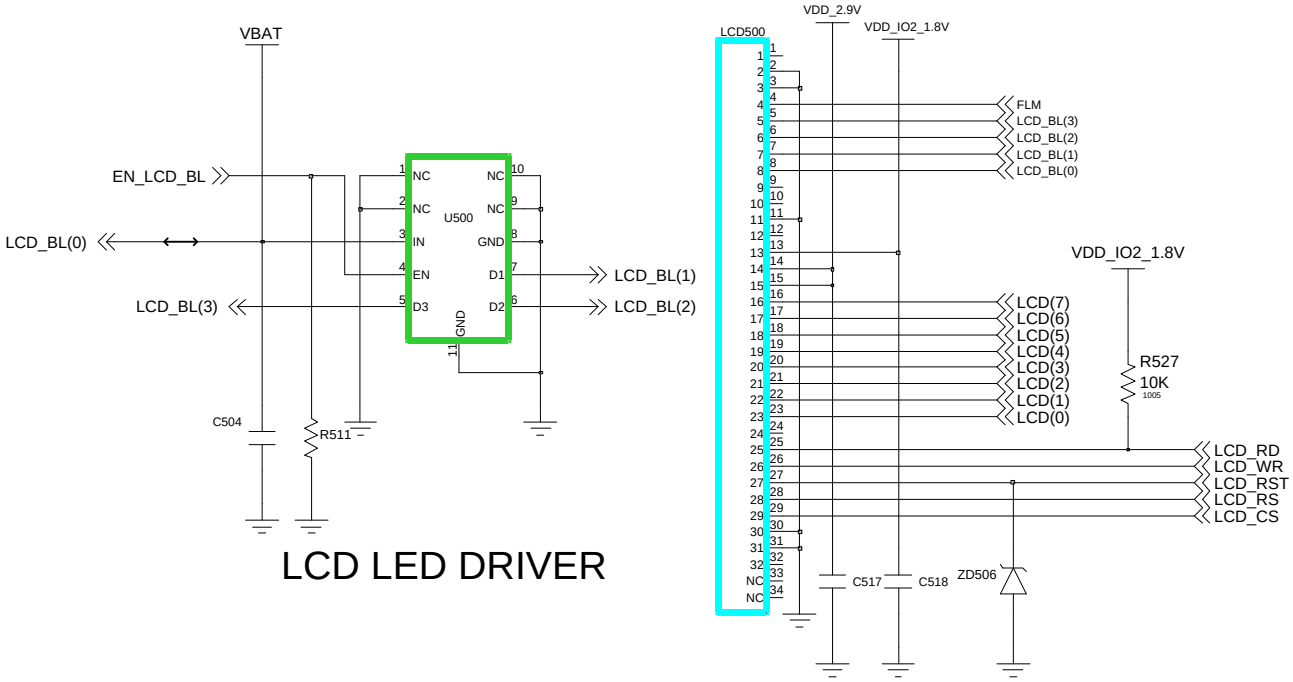

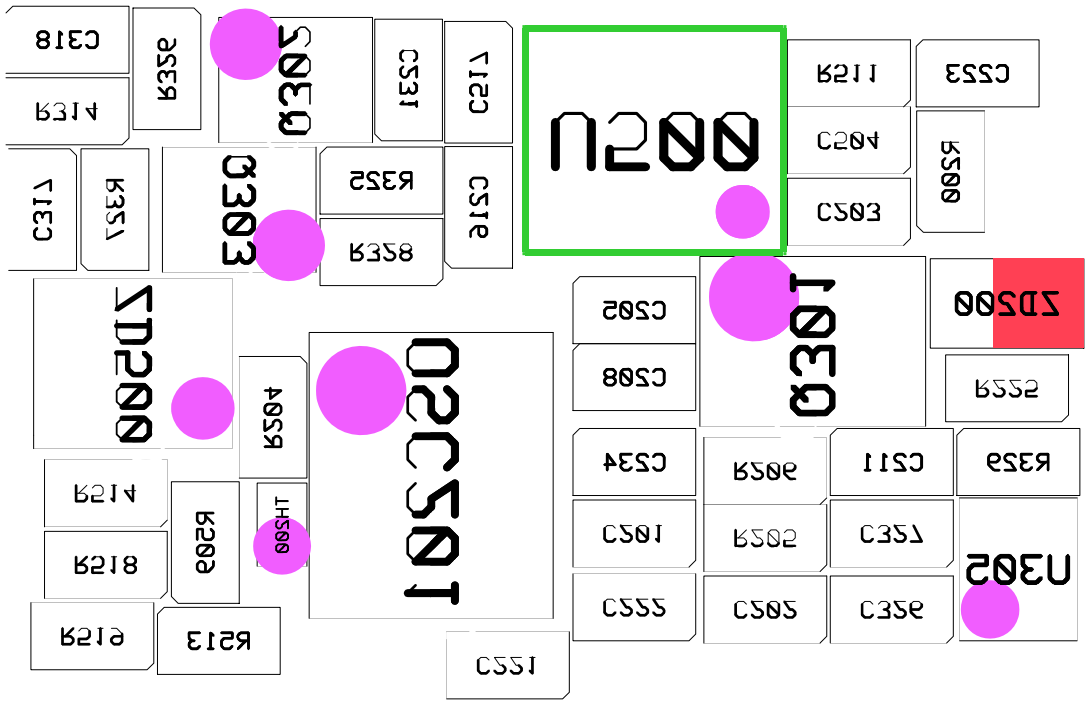

Confidential and proprietary-the contents in this service guide subject to change without prior notice.
Distribution, transmission, or infringement of any content or data from this document without Samsung's written authorization is strictly prohibited.

8-3-1-3. SIM Part

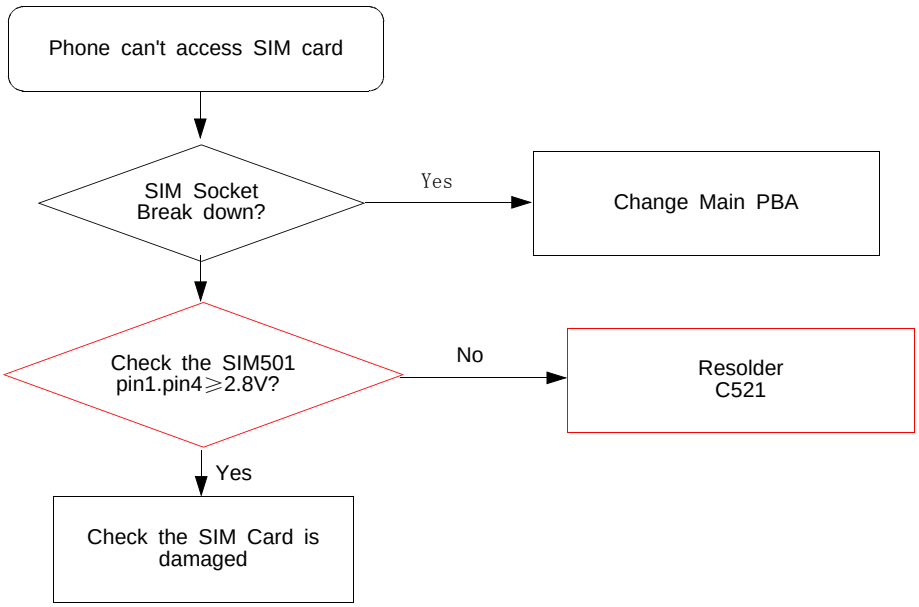

Confidential and proprietary-the contents in this service guide subject to change without prior notice.
Distribution, transmission, or infringement of any content or data from this document without Samsung's written authorization is strictly prohibited.

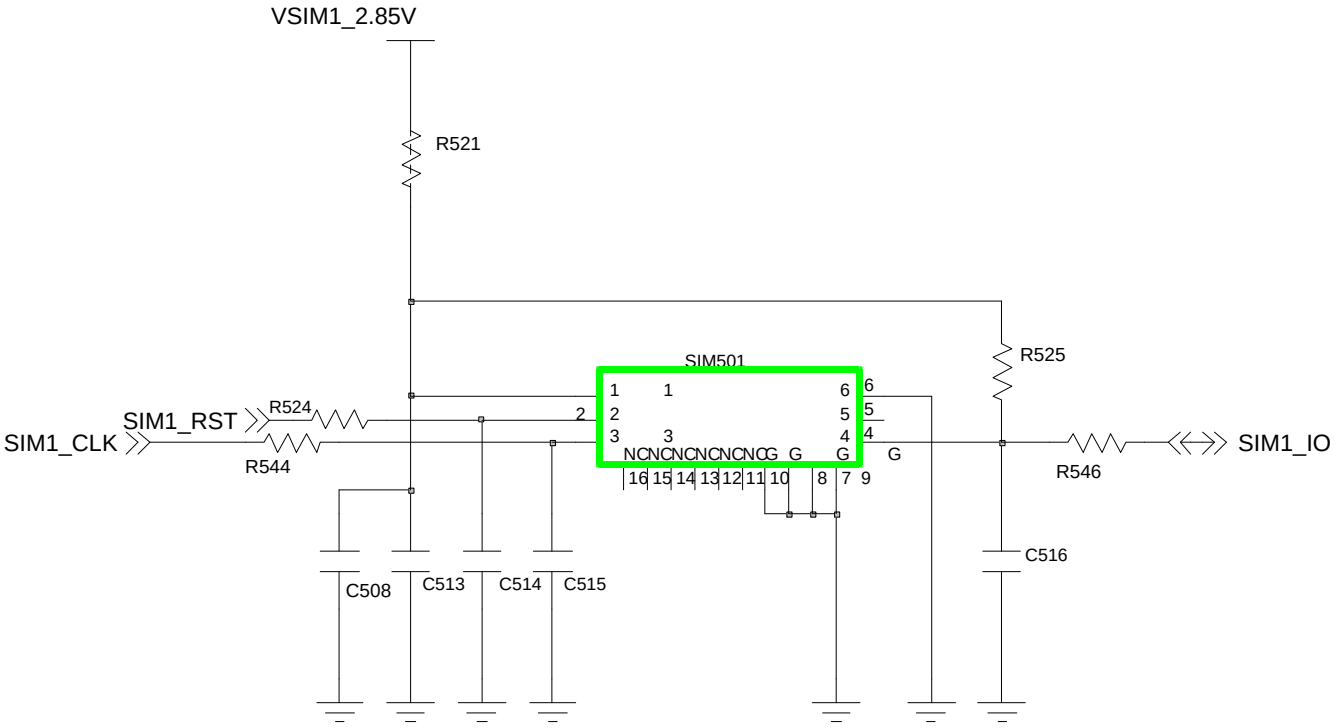

SIM1 CON

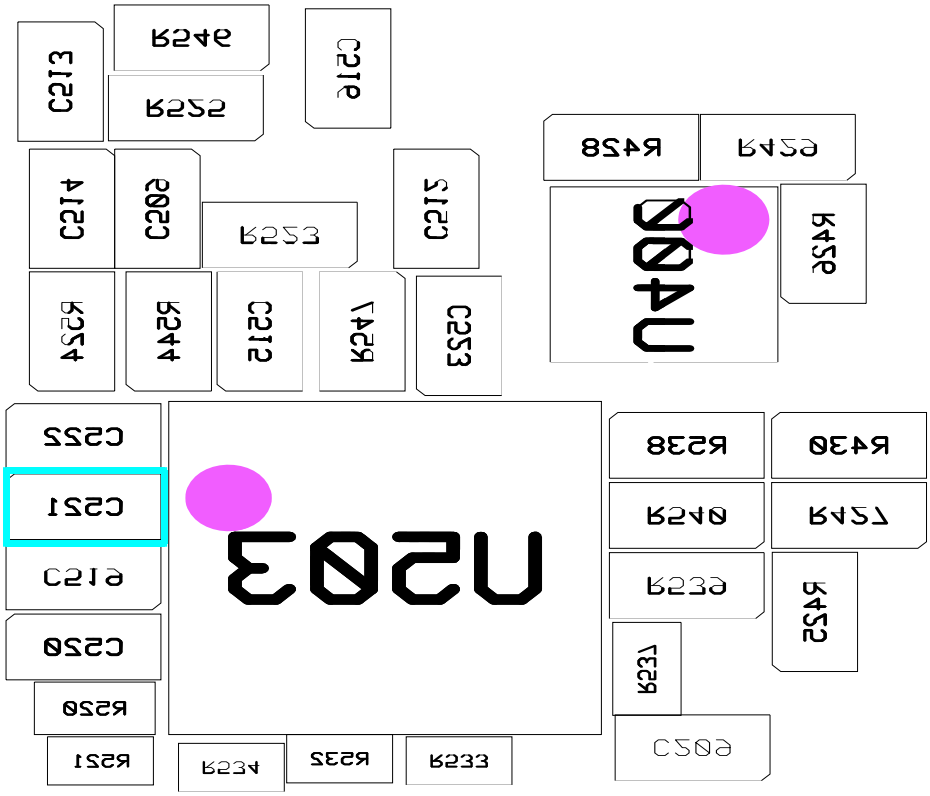

Confidential and proprietary-the contents in this service guide subject to change without prior notice.
Distribution, transmission, or infringement of any content or data from this document without Samsung's written authorization is strictly prohibited.

8-3-1-4. Microphone Part

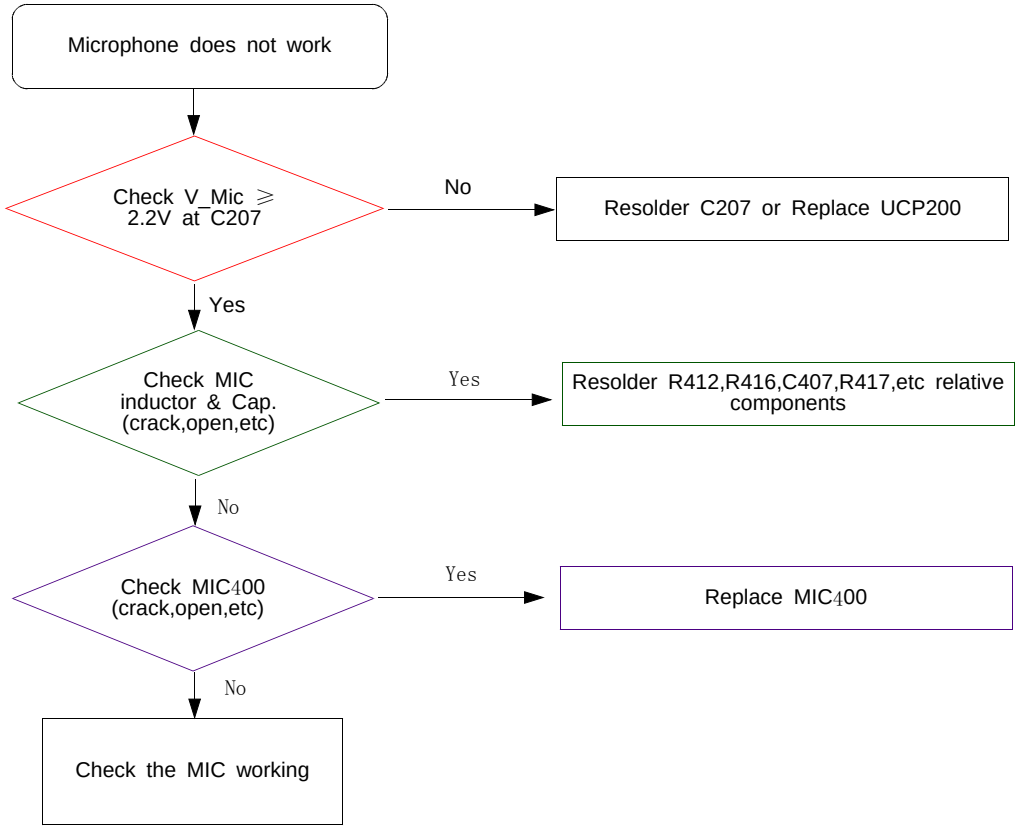

Confidential and proprietary-the contents in this service guide subject to change without prior notice.
Distribution, transmission, or infringement of any content or data from this document without Samsung's written authorization is strictly prohibited.

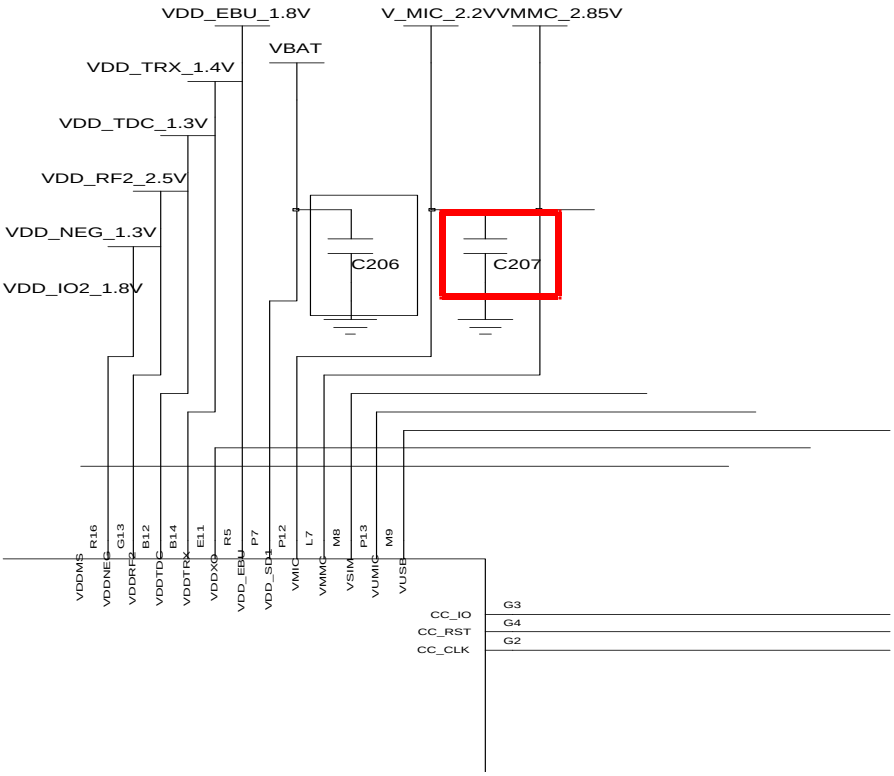

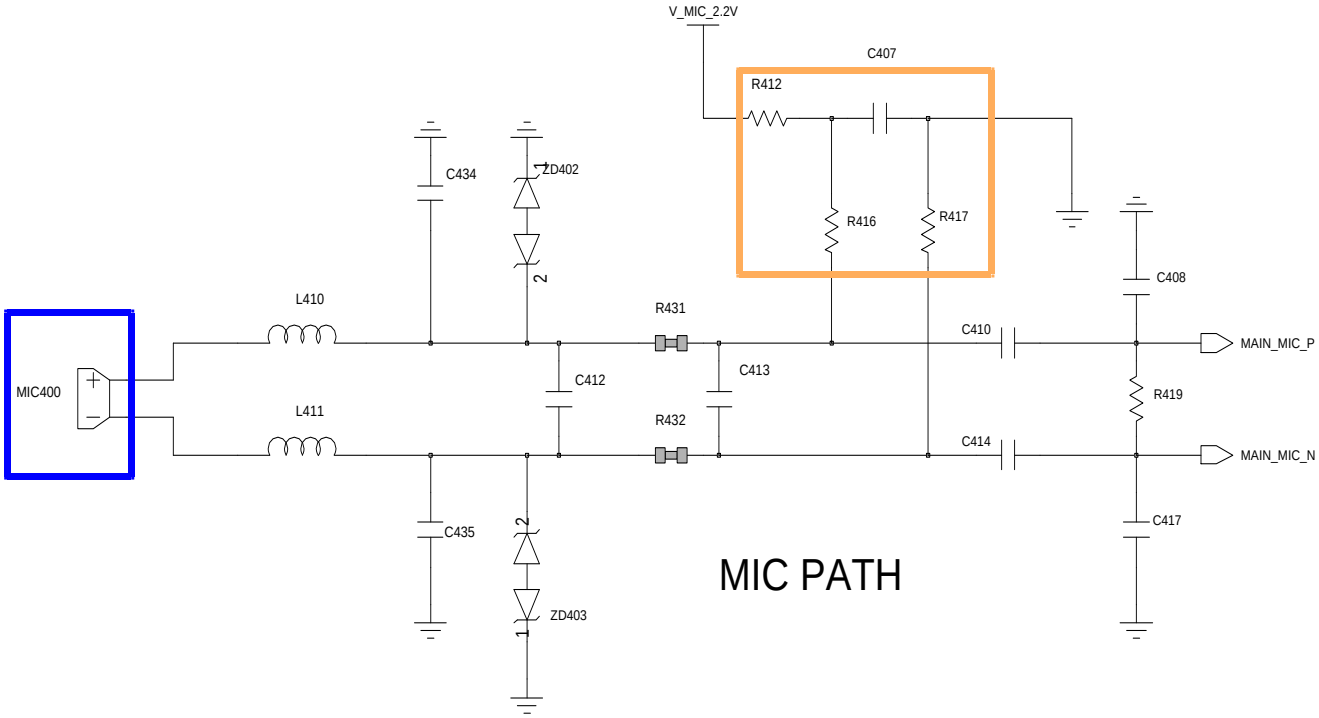

Confidential and proprietary-the contents in this service guide subject to change without prior notice.
Distribution, transmission, or infringement of any content or data from this document without Samsung's written authorization is strictly prohibited.

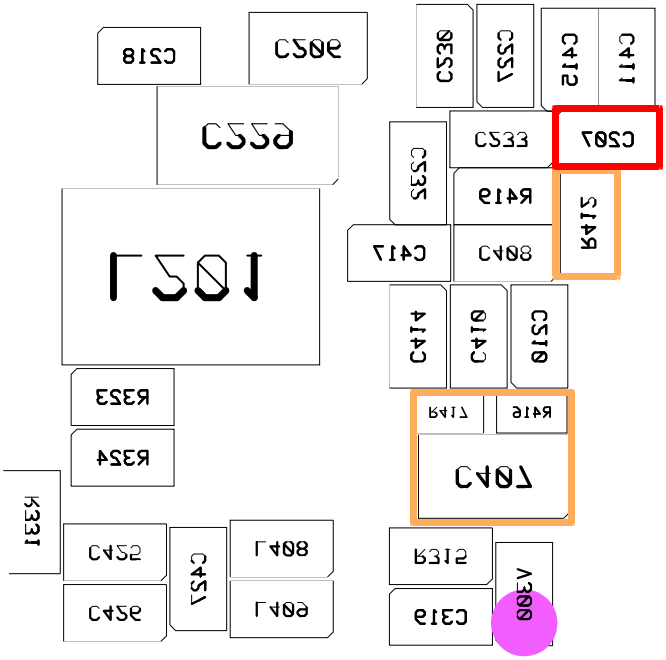

Confidential and proprietary-the contents in this service guide subject to change without prior notice.
Distribution, transmission, or infringement of any content or data from this document without Samsung's written authorization is strictly prohibited.

8-3-1-6. Speaker Part

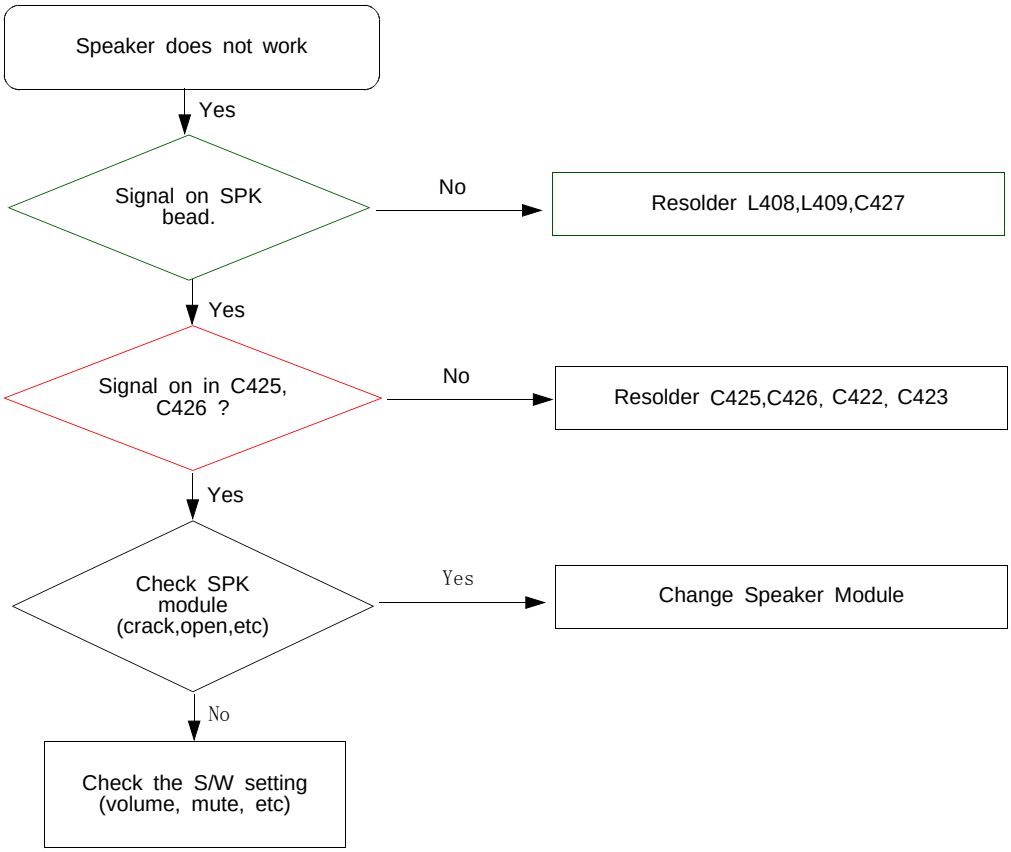

Confidential and proprietary-the contents in this service guide subject to change without prior notice.
Distribution, transmission, or infringement of any content or data from this document without Samsung's written authorization is strictly prohibited.

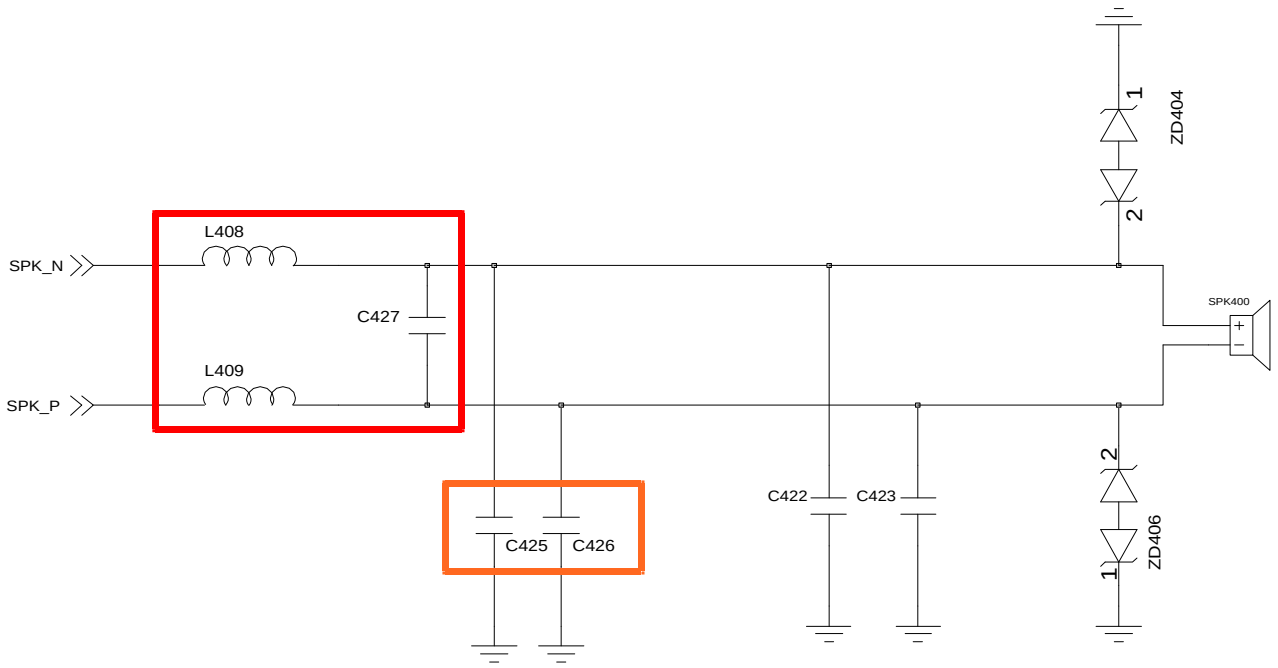

SPK

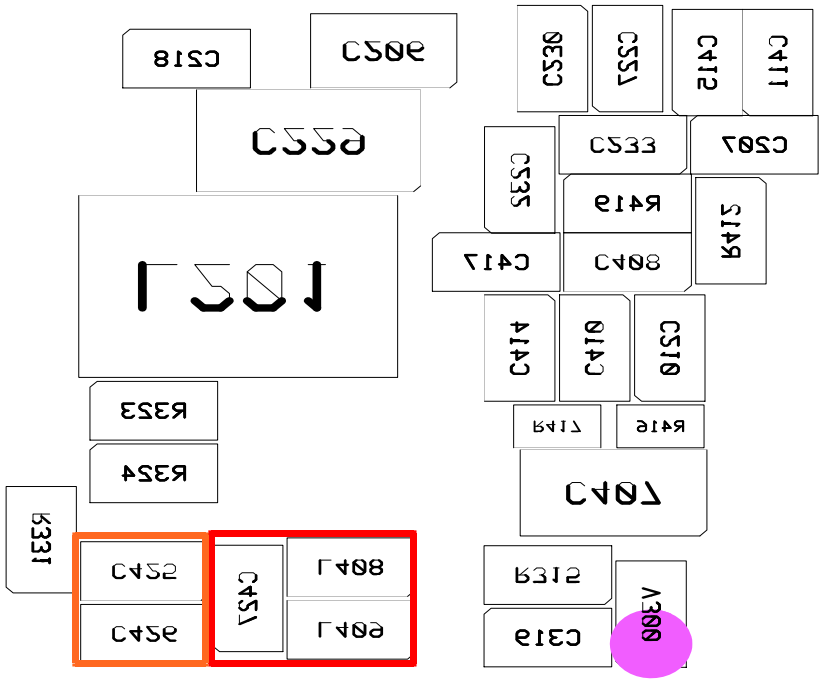

Confidential and proprietary-the contents in this service guide subject to change without prior notice.
Distribution, transmission, or infringement of any content or data from this document without Samsung's written authorization is strictly prohibited.

8-3-1-7. Stereo Headset Part

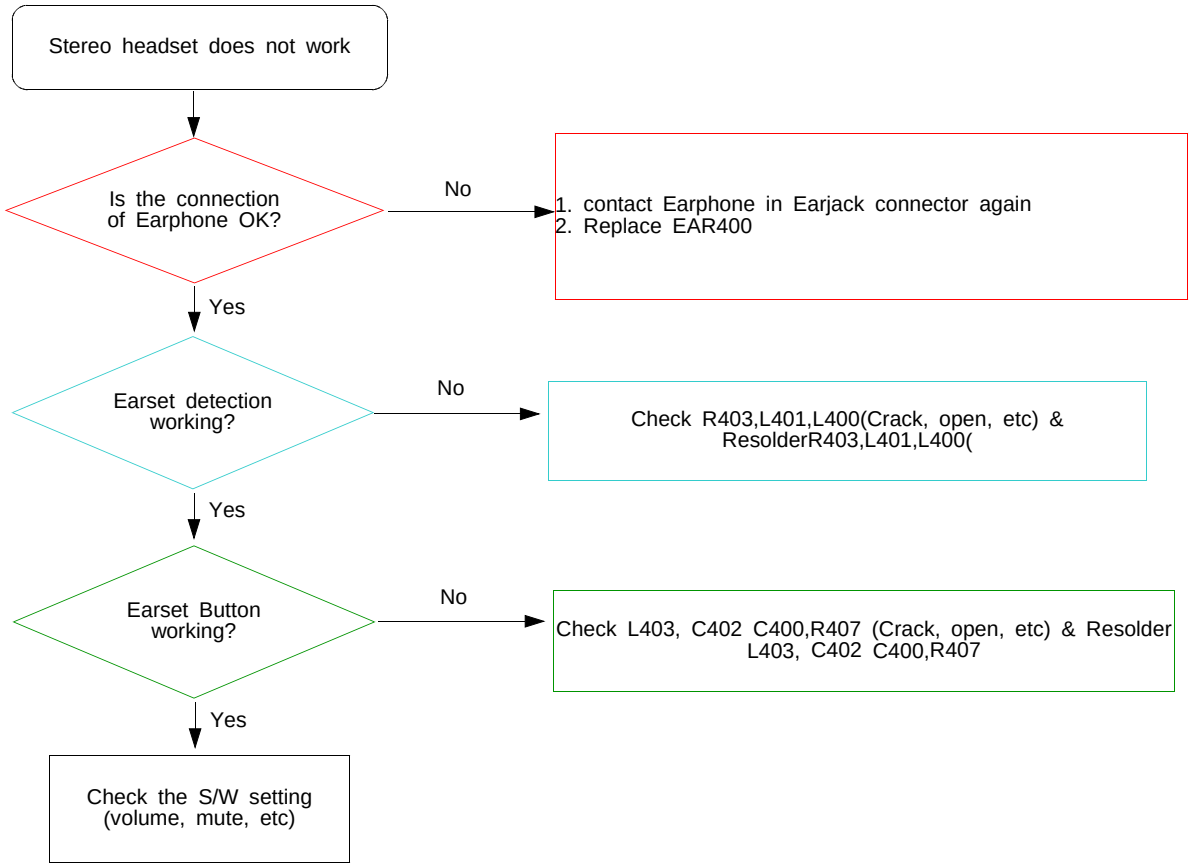

Confidential and proprietary-the contents in this service guide subject to change without prior notice.
Distribution, transmission, or infringement of any content or data from this document without Samsung's written authorization is strictly prohibited.

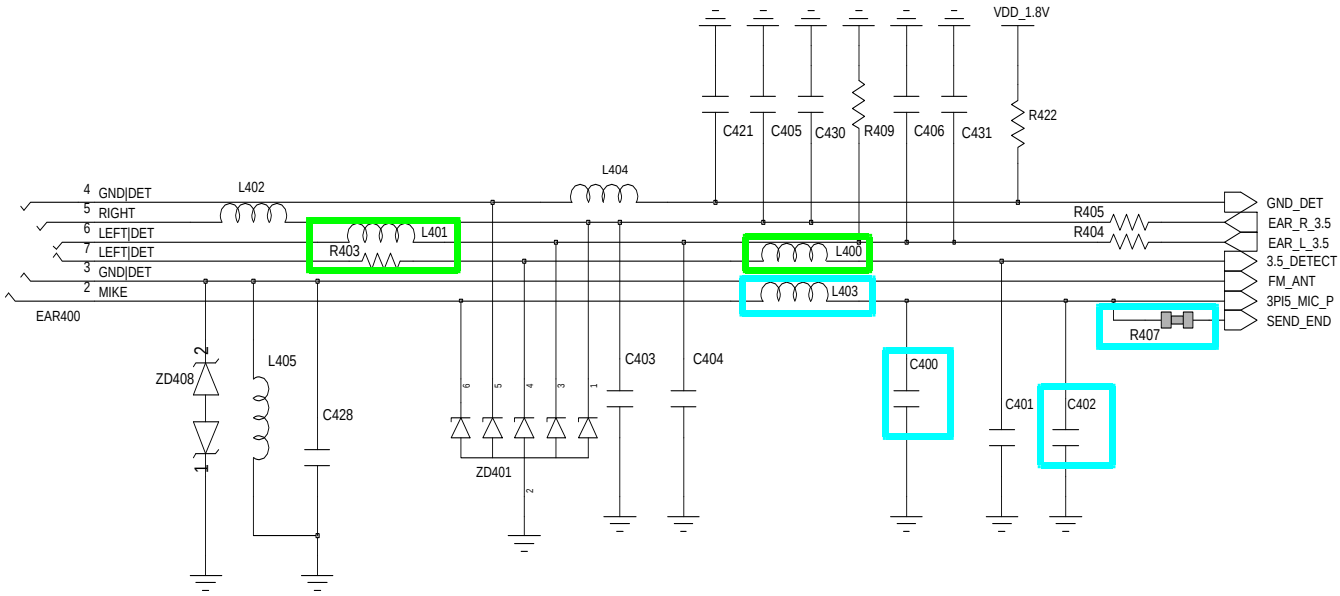

3.5 pi EAR JACK

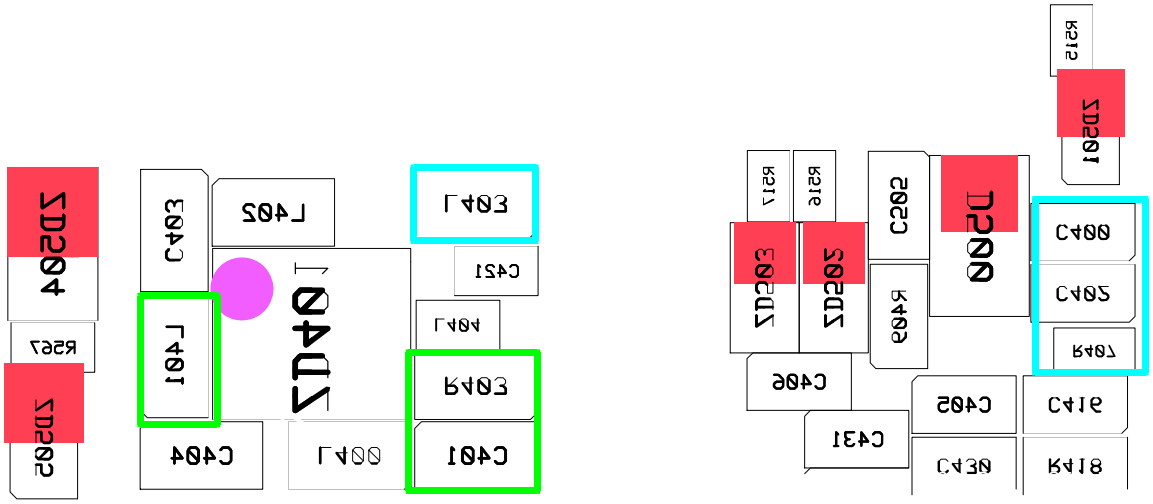

Confidential and proprietary-the contents in this service guide subject to change without prior notice.
Distribution, transmission, or infringement of any content or data from this document without Samsung's written authorization is strictly prohibited.

8-3-1-08. Motor Part

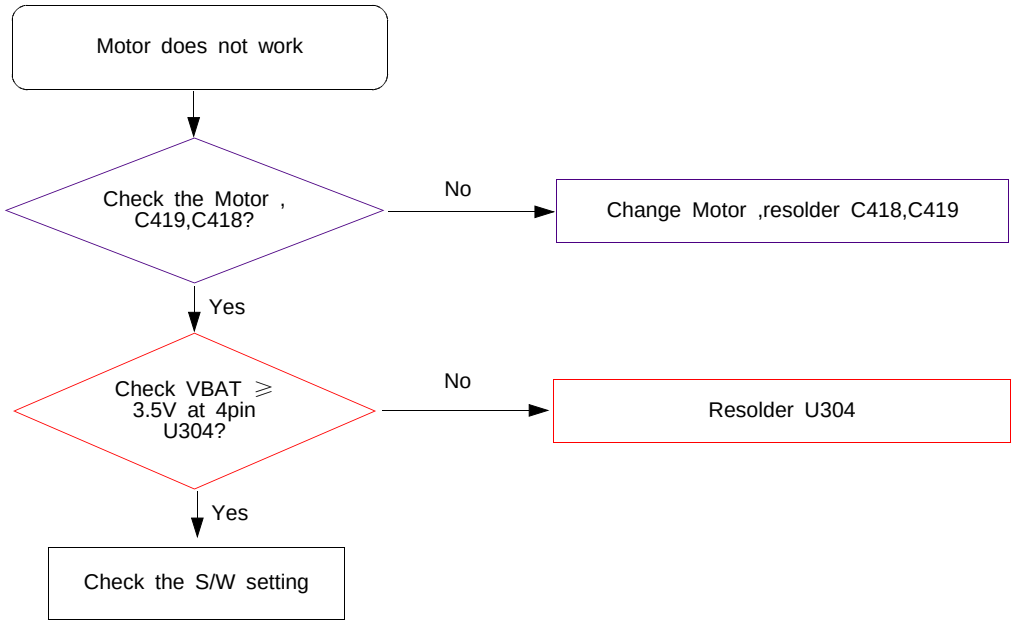

Confidential and proprietary-the contents in this service guide subject to change without prior notice.
Distribution, transmission, or infringement of any content or data from this document without Samsung's written authorization is strictly prohibited.

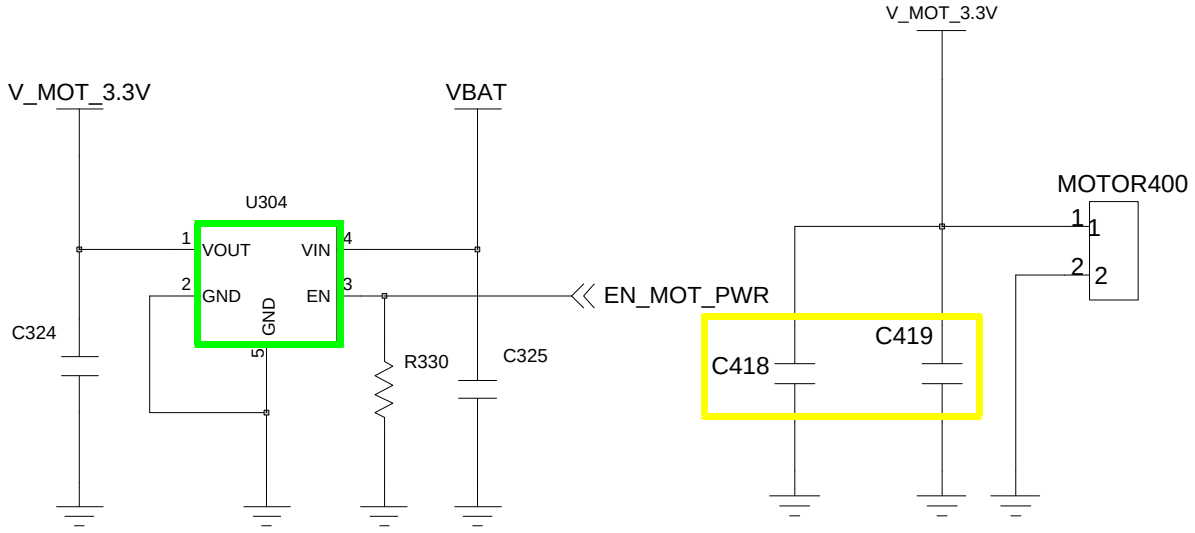

MOT LDO

MOTOR CON

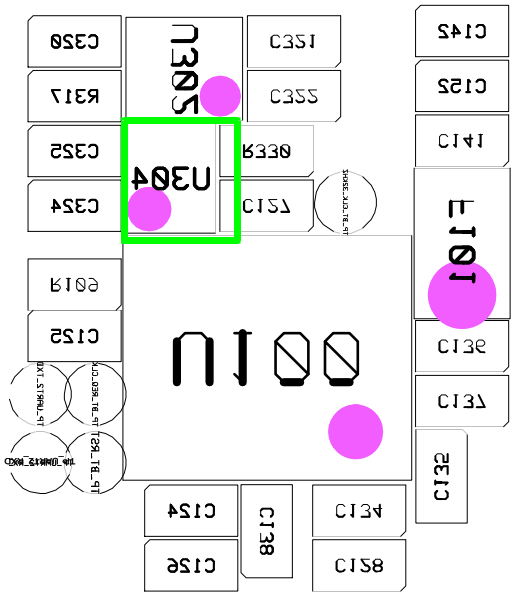

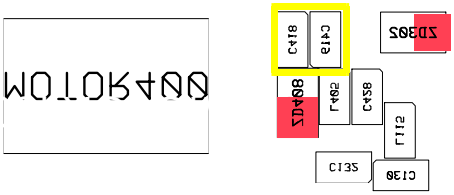

Confidential and proprietary-the contents in this service guide subject to change without prior notice.
Distribution, transmission, or infringement of any content or data from this document without Samsung's written authorization is strictly prohibited.

8-3-1-9. SD Card Part

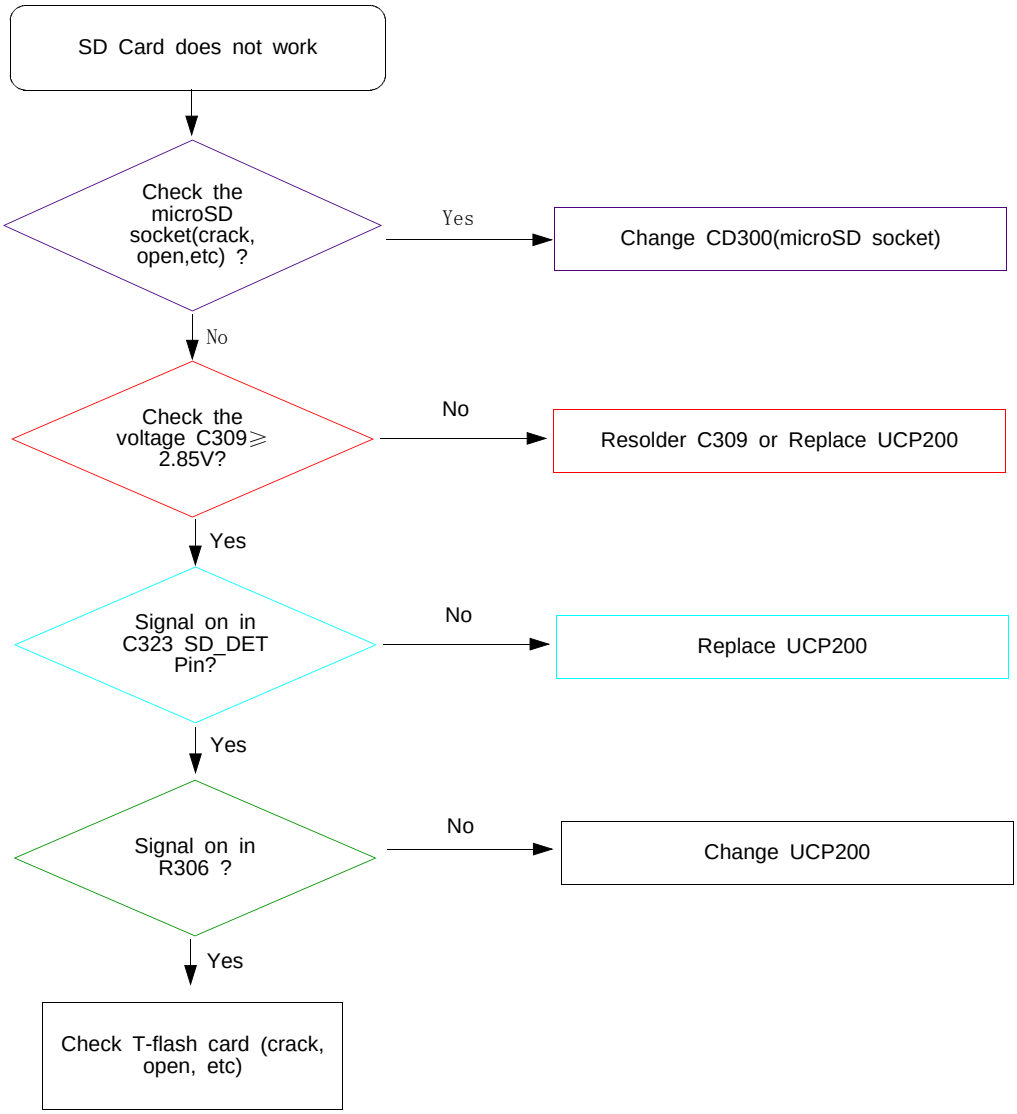

Confidential and proprietary-the contents in this service guide subject to change without prior notice.
Distribution, transmission, or infringement of any content or data from this document without Samsung's written authorization is strictly prohibited.

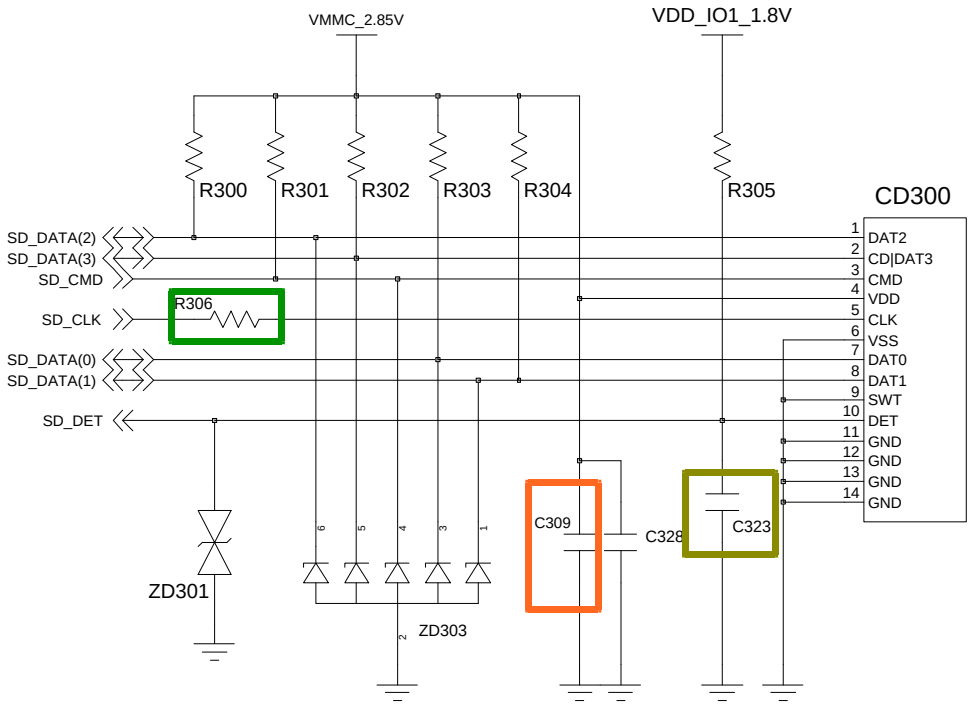

SD CON

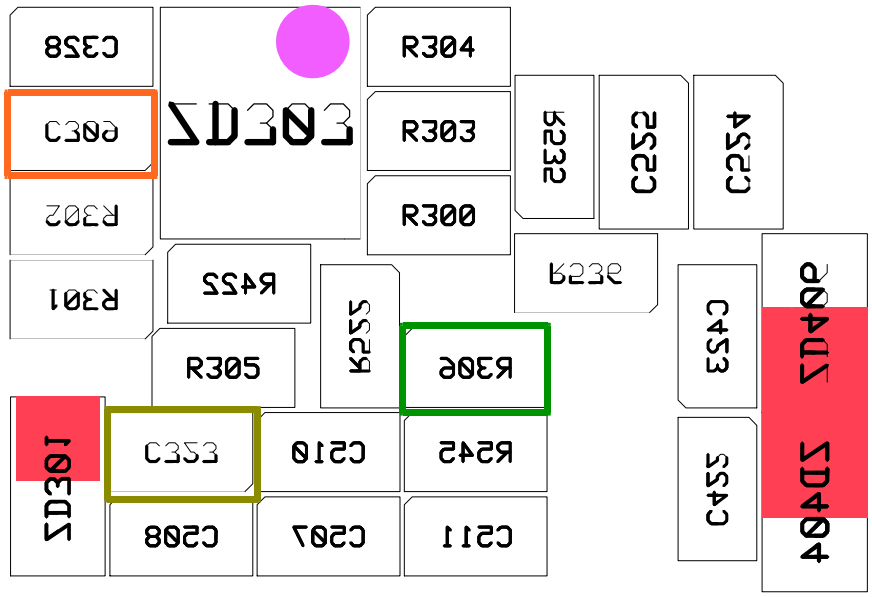

Confidential and proprietary-the contents in this service guide subject to change without prior notice.
Distribution, transmission, or infringement of any content or data from this document without Samsung's written authorization is strictly prohibited.

8-3-1-10. Camera Part

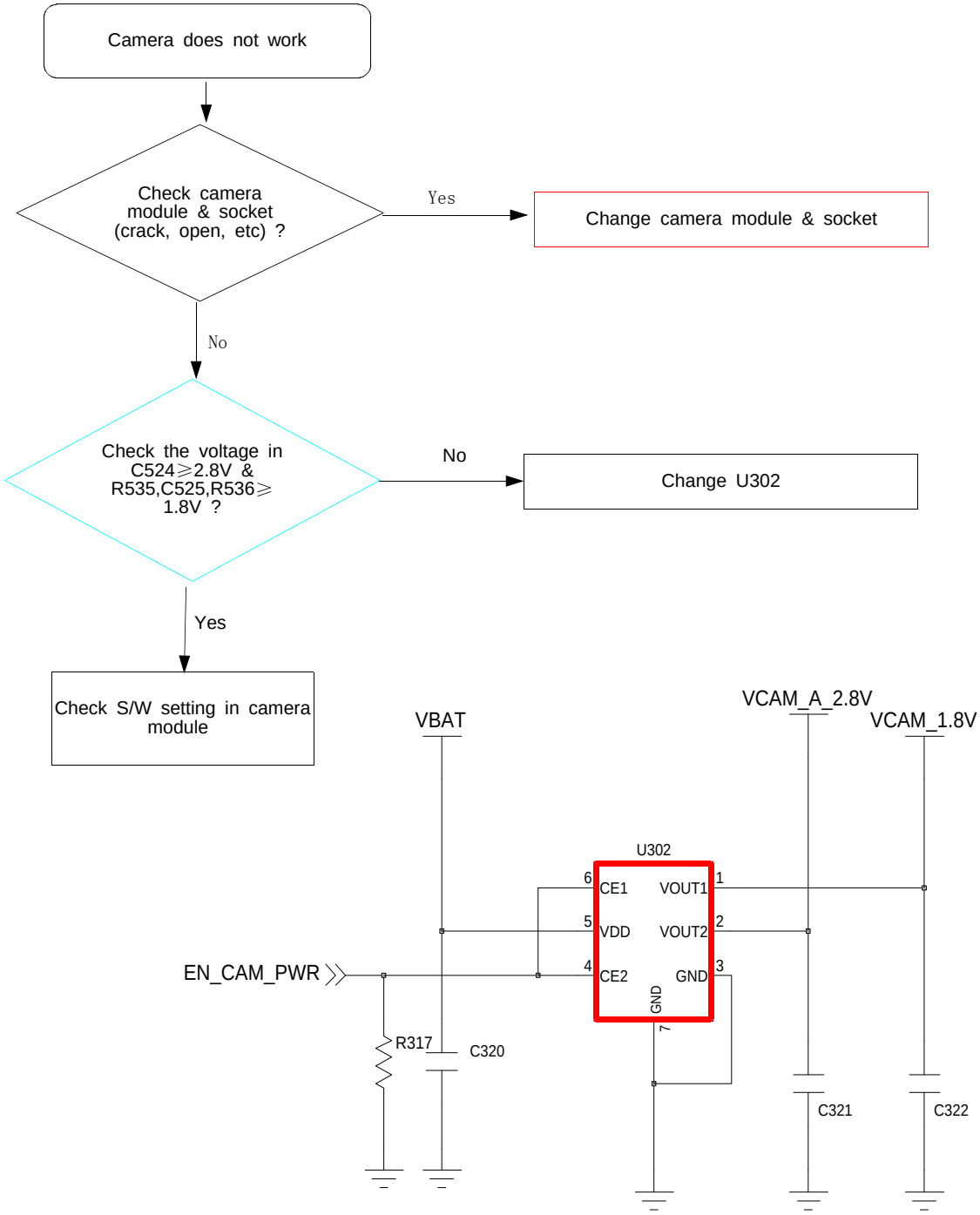

CAM LDO

Confidential and proprietary-the contents in this service guide subject to change without prior notice.
Distribution, transmission, or infringement of any content or data from this document without Samsung's written authorization is strictly prohibited.

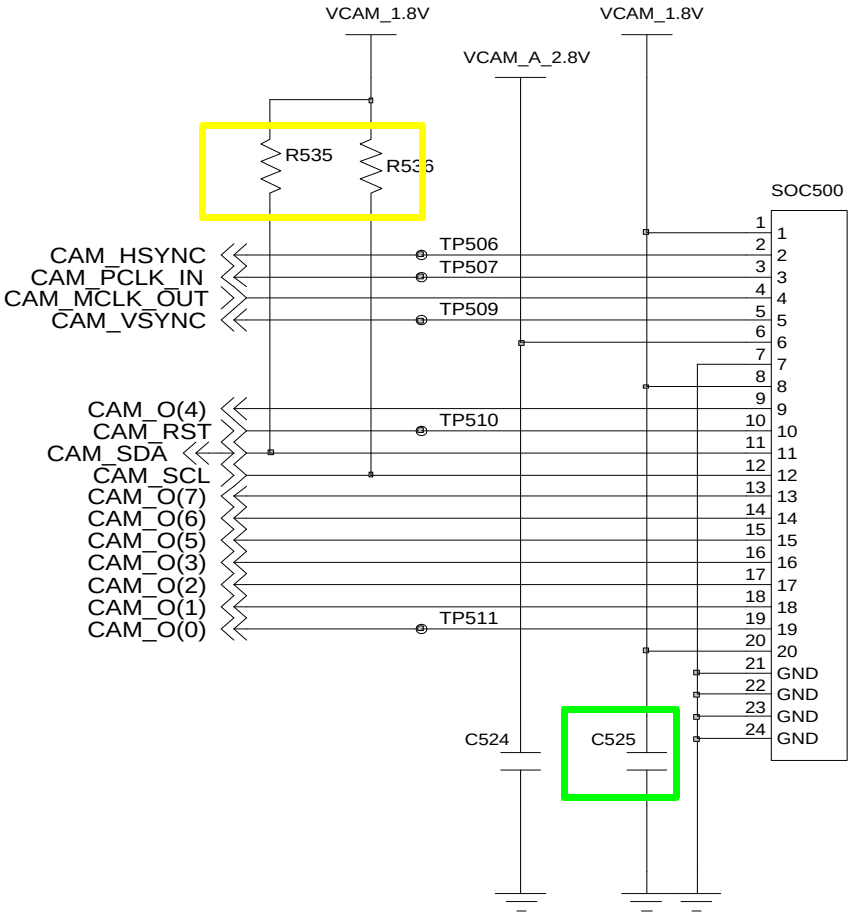

VGA CAM SOCKET

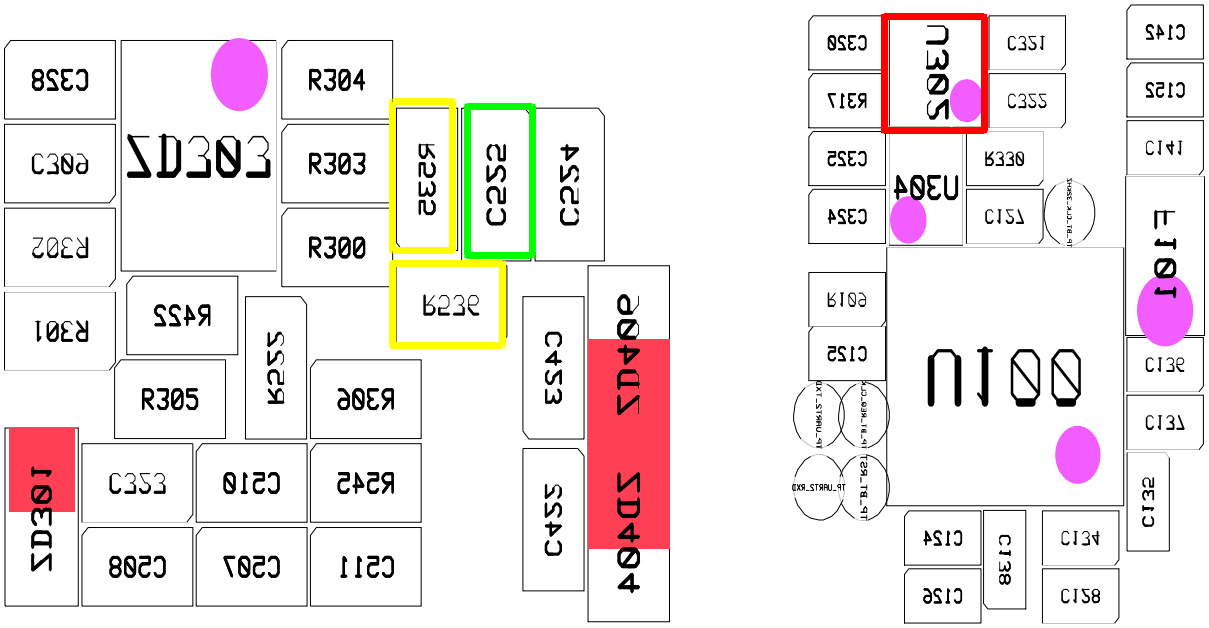

Confidential and proprietary-the contents in this service guide subject to change without prior notice.
Distribution, transmission, or infringement of any content or data from this document without Samsung's written authorization is strictly prohibited.

8-3-1-11. Torch Part

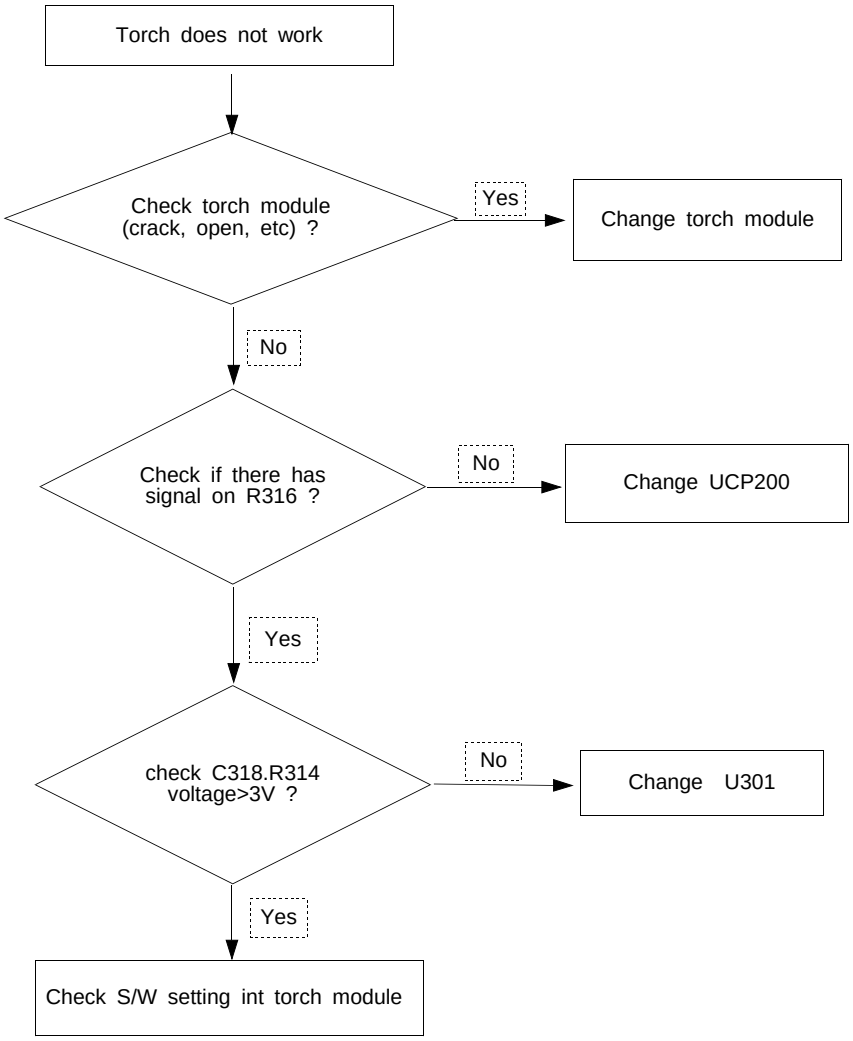

Confidential and proprietary-the contents in this service guide subject to change without prior notice.
Distribution, transmission, or infringement of any content or data from this document without Samsung's written authorization is strictly prohibited.

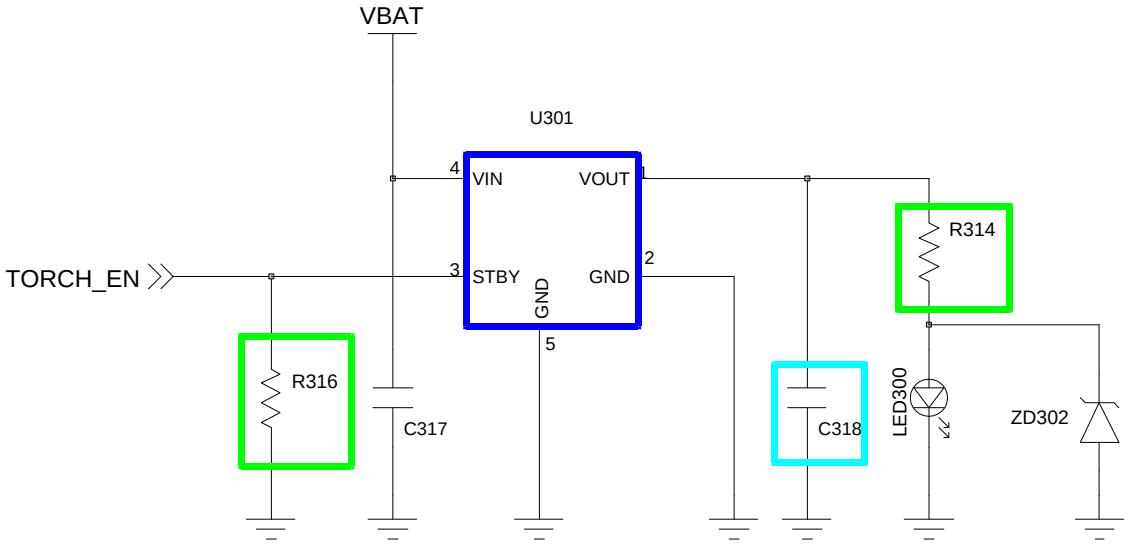

TORCH LDO

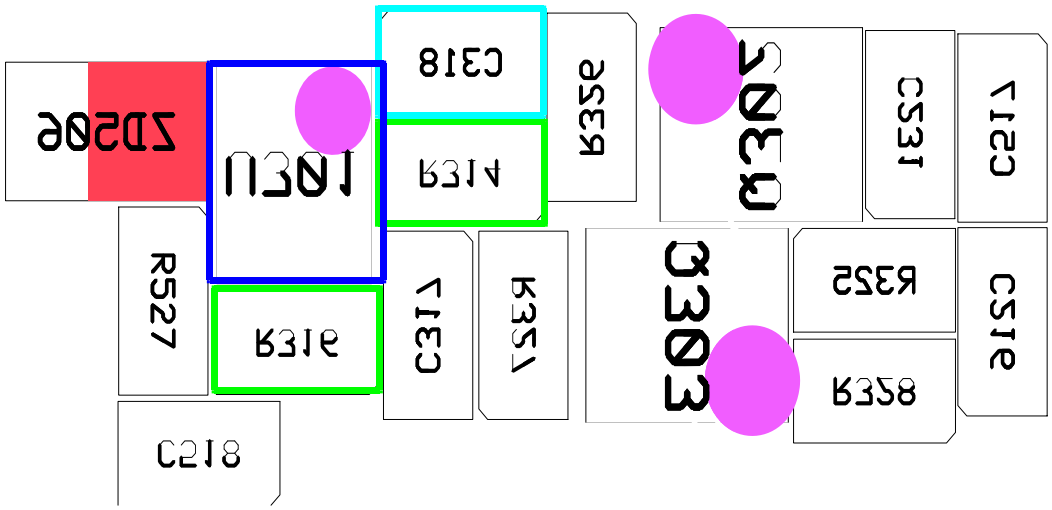

Confidential and proprietary-the contents in this service guide subject to change without prior notice.
Distribution, transmission, or infringement of any content or data from this document without Samsung's written authorization is strictly prohibited.

8-3-2. RF part

8-3-2-1. GSM900 Receiver

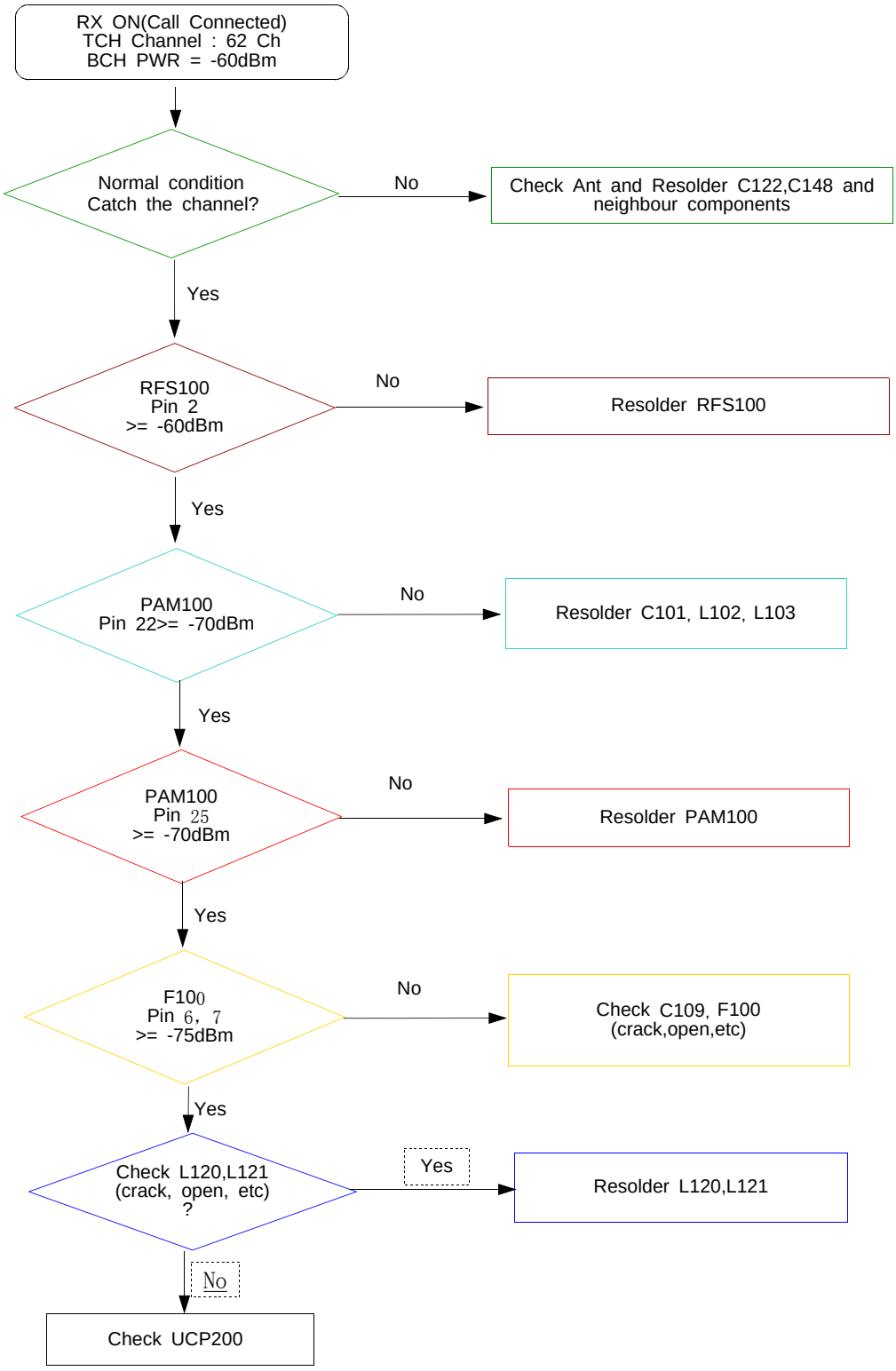

Confidential and proprietary-the contents in this service guide subject to change without prior notice.
Distribution, transmission, or infringement of any content or data from this document without Samsung's written authorization is strictly prohibited.

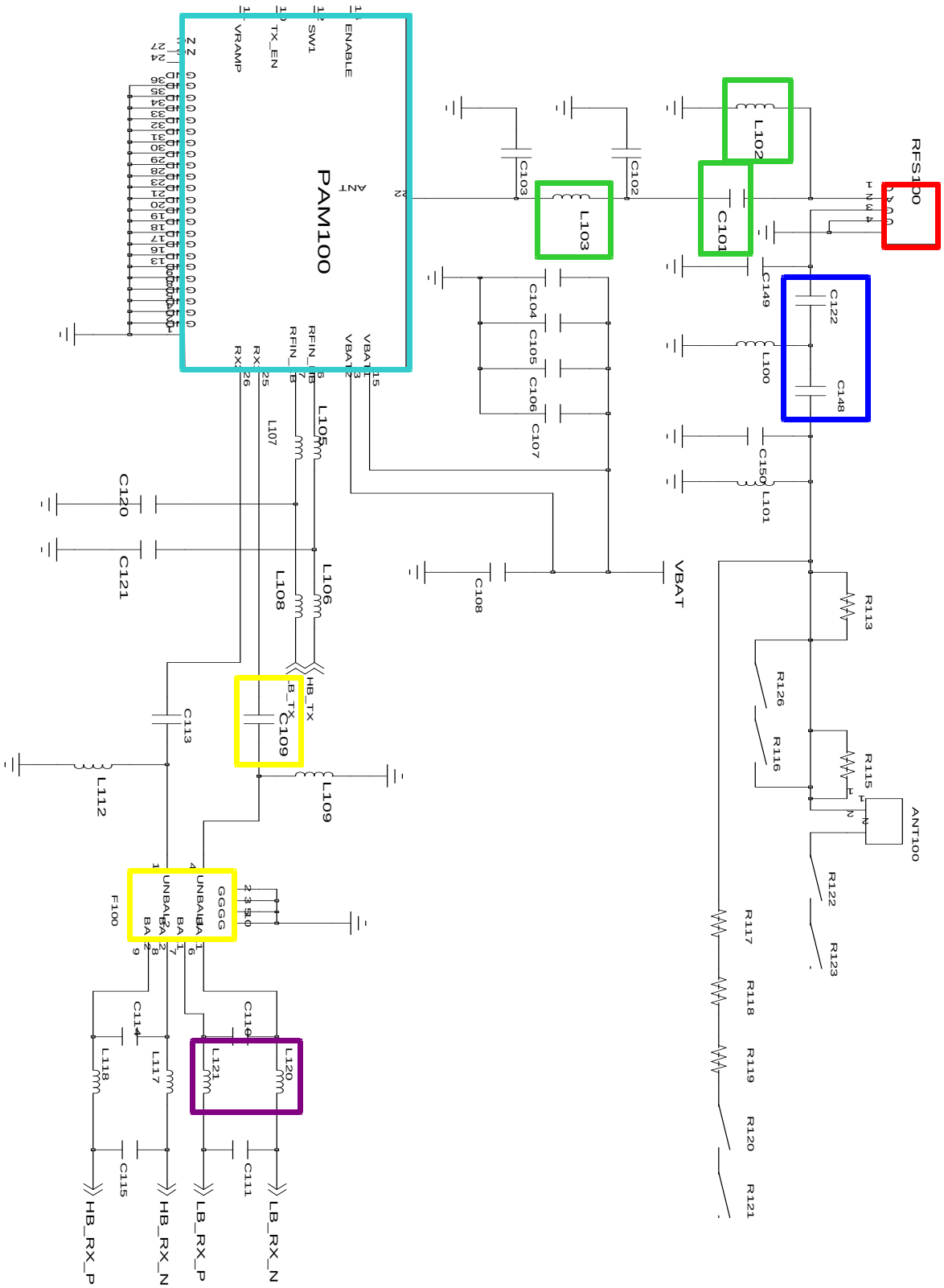

Confidential and proprietary-the contents in this service guide subject to change without prior notice.
Distribution, transmission, or infringement of any content or data from this document without Samsung's written authorization is strictly prohibited.

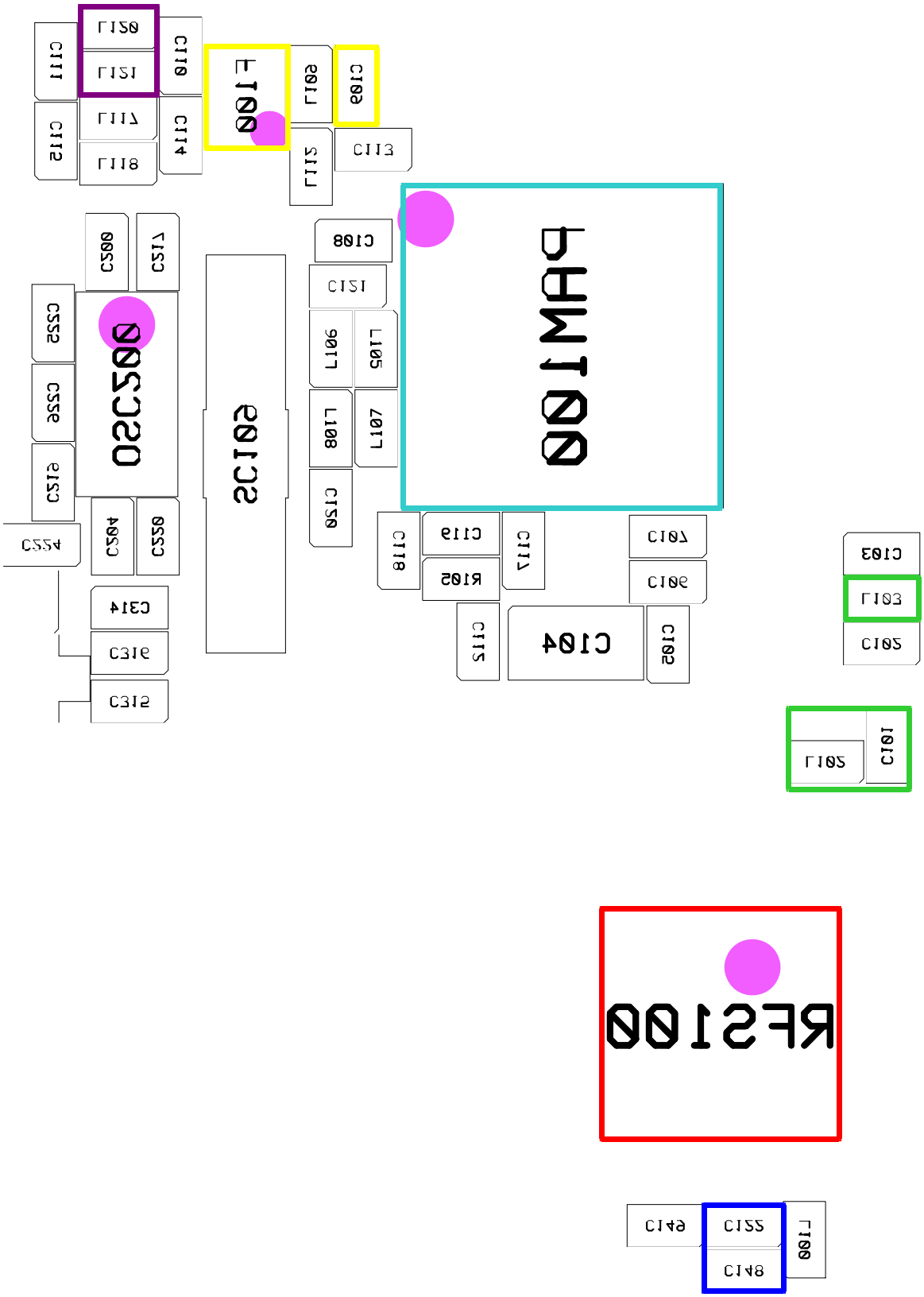

Confidential and proprietary-the contents in this service guide subject to change without prior notice.
Distribution, transmission, or infringement of any content or data from this document without Samsung's written authorization is strictly prohibited.

8-3-2-2. GSM900 Transmitter

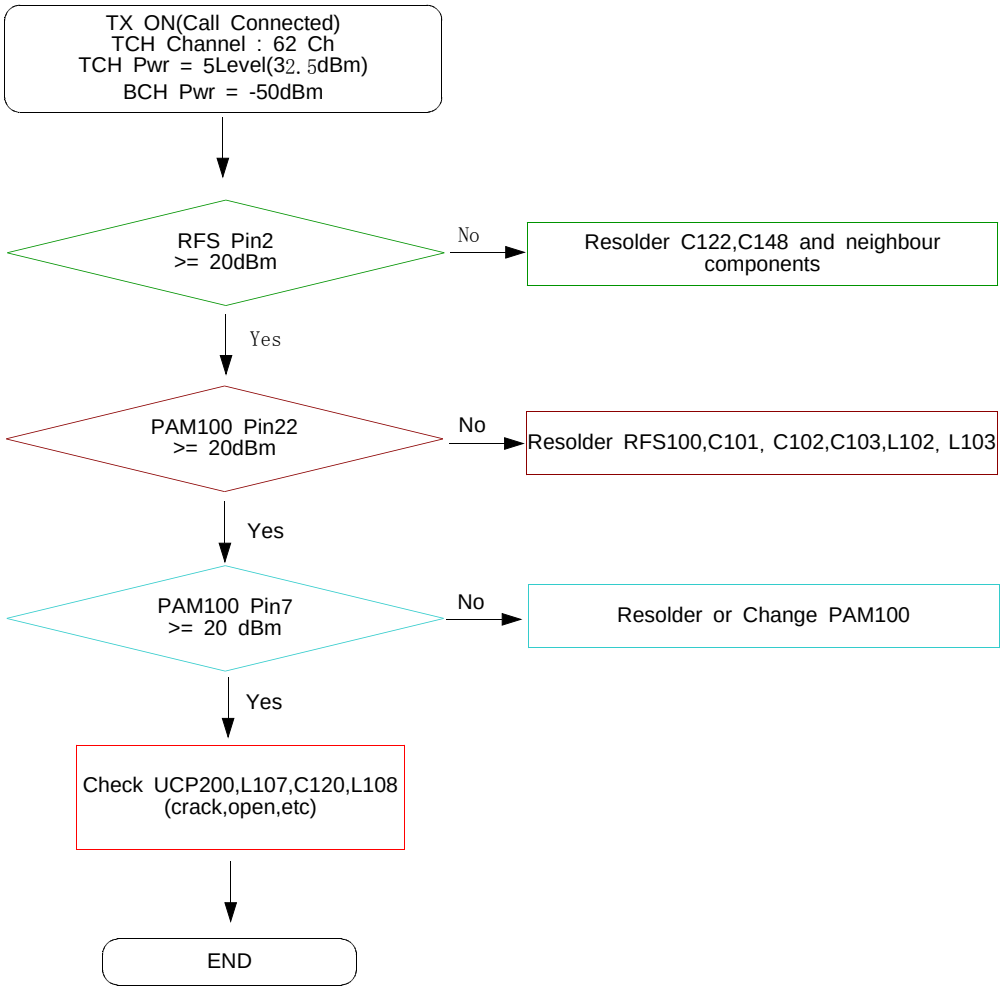

Confidential and proprietary-the contents in this service guide subject to change without prior notice.
Distribution, transmission, or infringement of any content or data from this document without Samsung's written authorization is strictly prohibited.

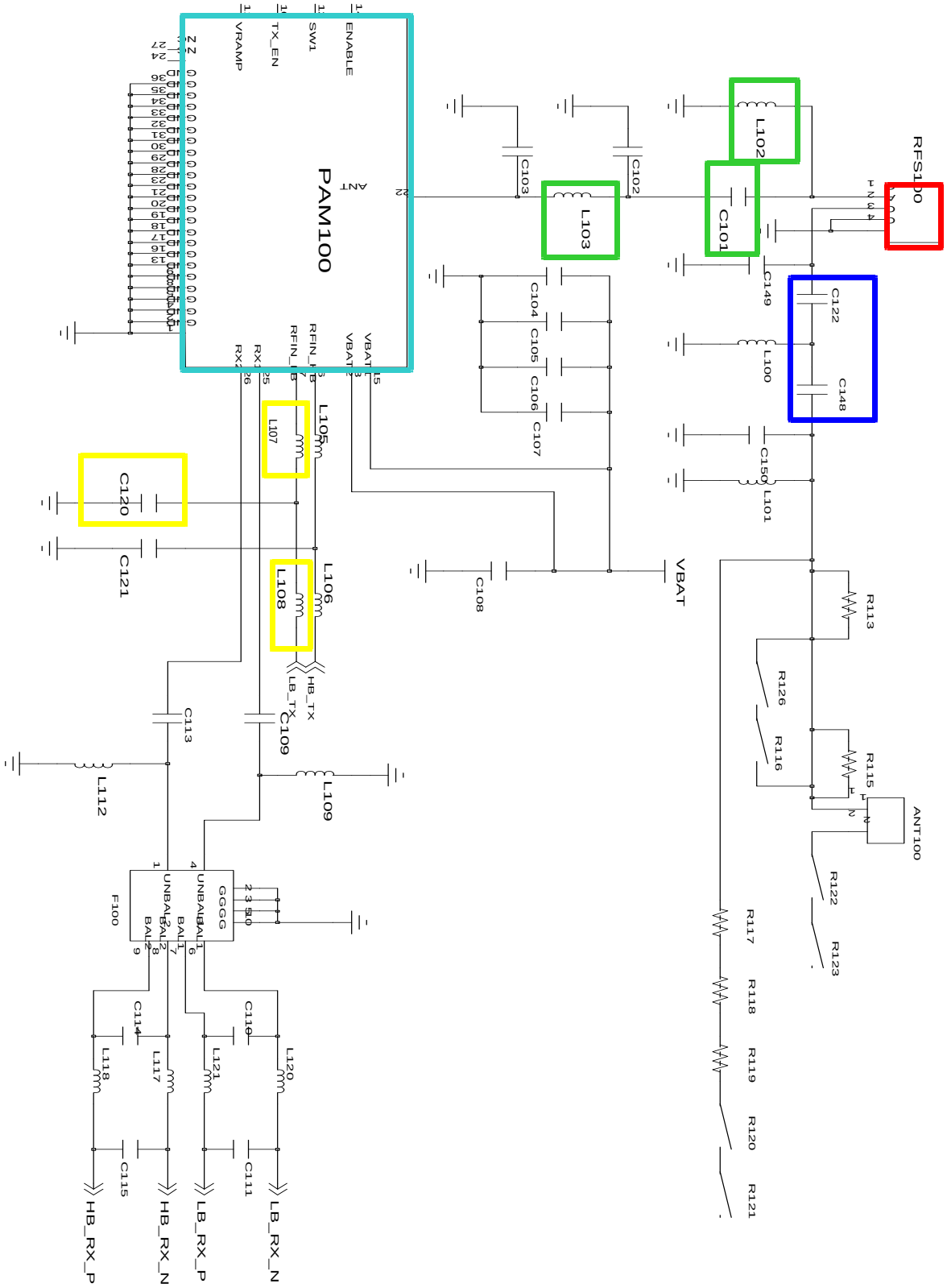

Confidential and proprietary-the contents in this service guide subject to change without prior notice.
Distribution, transmission, or infringement of any content or data from this document without Samsung's written authorization is strictly prohibited.

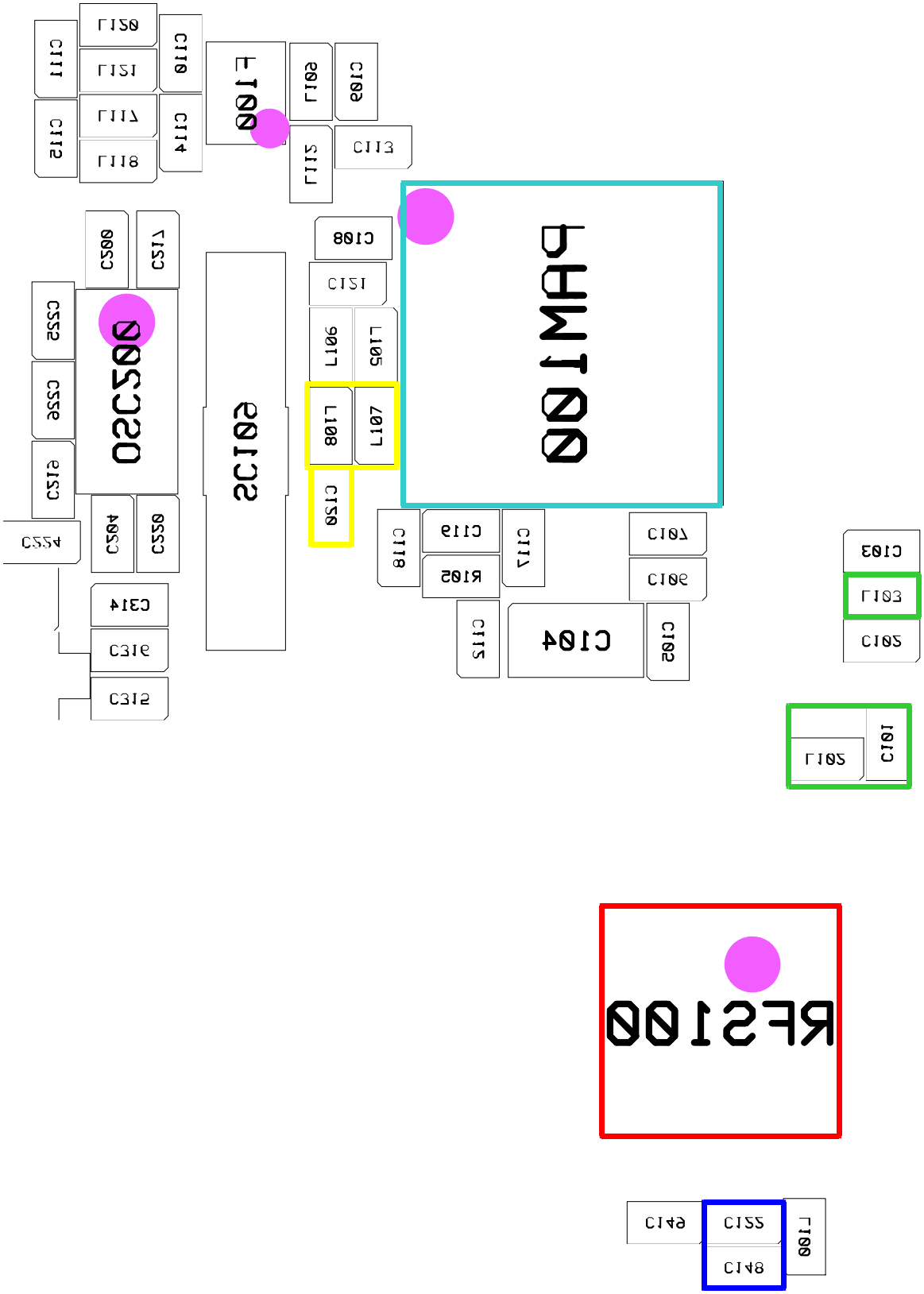

Confidential and proprietary-the contents in this service guide subject to change without prior notice.
Distribution, transmission, or infringement of any content or data from this document without Samsung's written authorization is strictly prohibited.

8-3-2-3. DCS Receiver

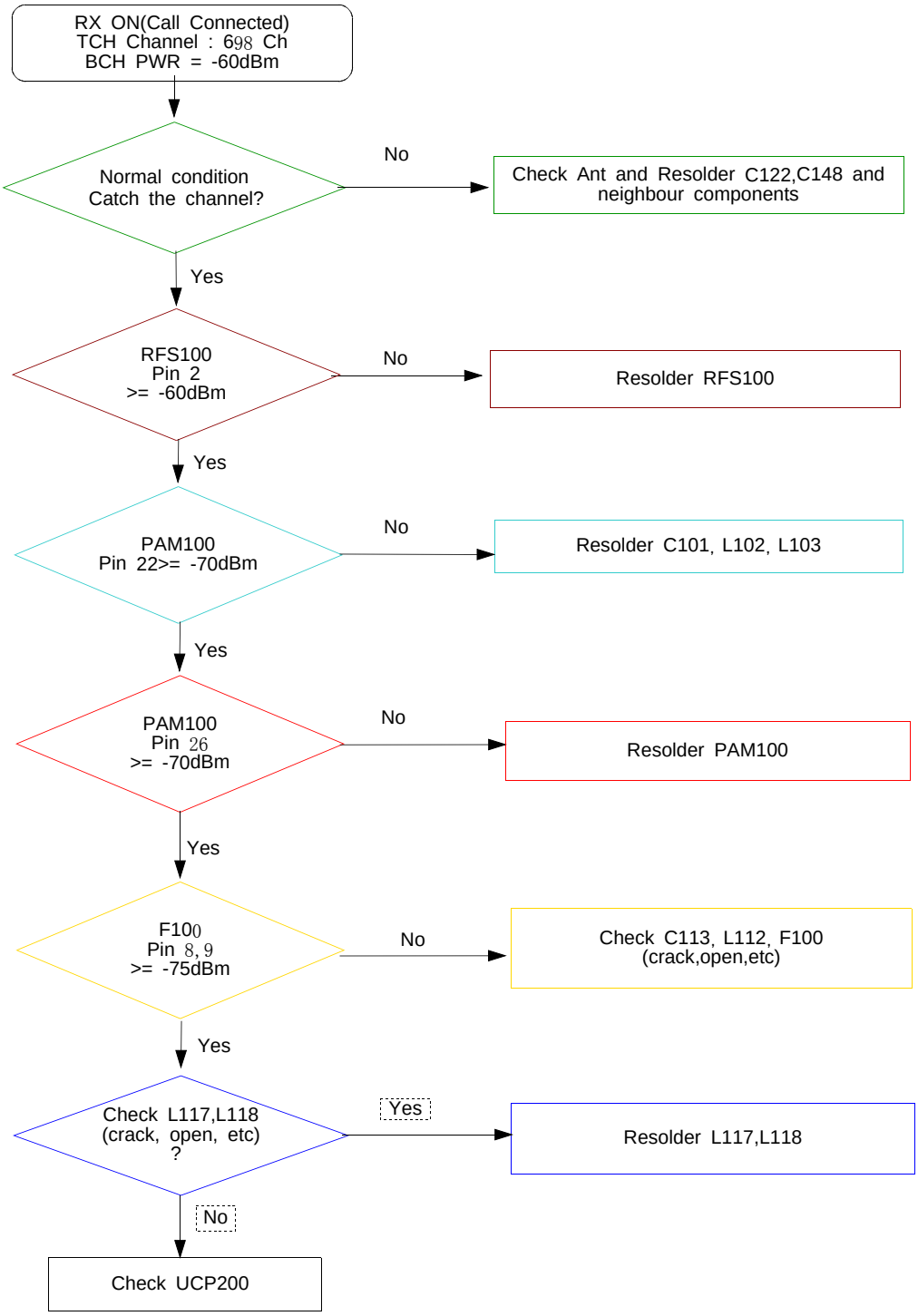

Confidential and proprietary-the contents in this service guide subject to change without prior notice.
Distribution, transmission, or infringement of any content or data from this document without Samsung's written authorization is strictly prohibited.

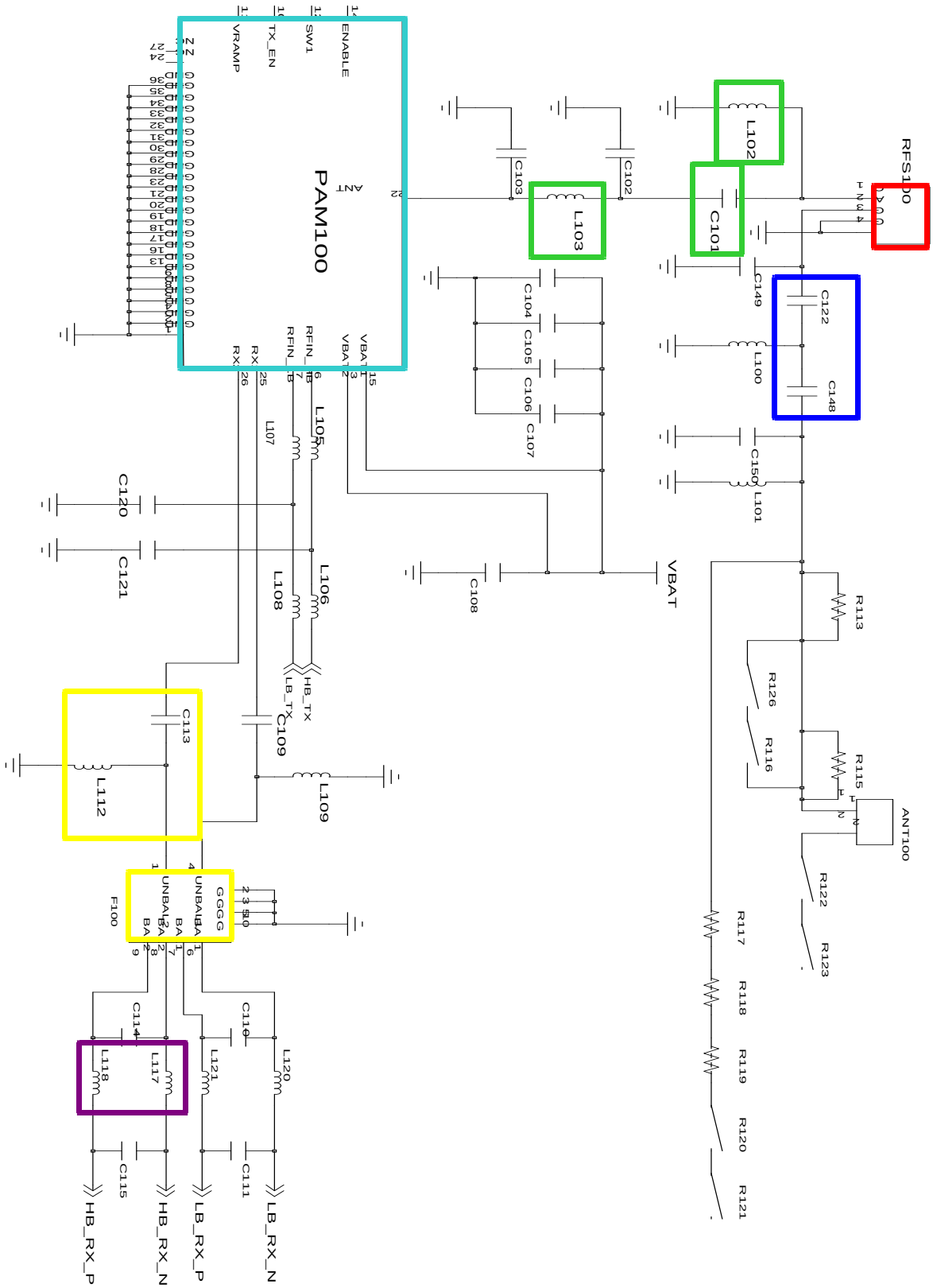

Confidential and proprietary-the contents in this service guide subject to change without prior notice.
Distribution, transmission, or infringement of any content or data from this document without Samsung's written authorization is strictly prohibited.

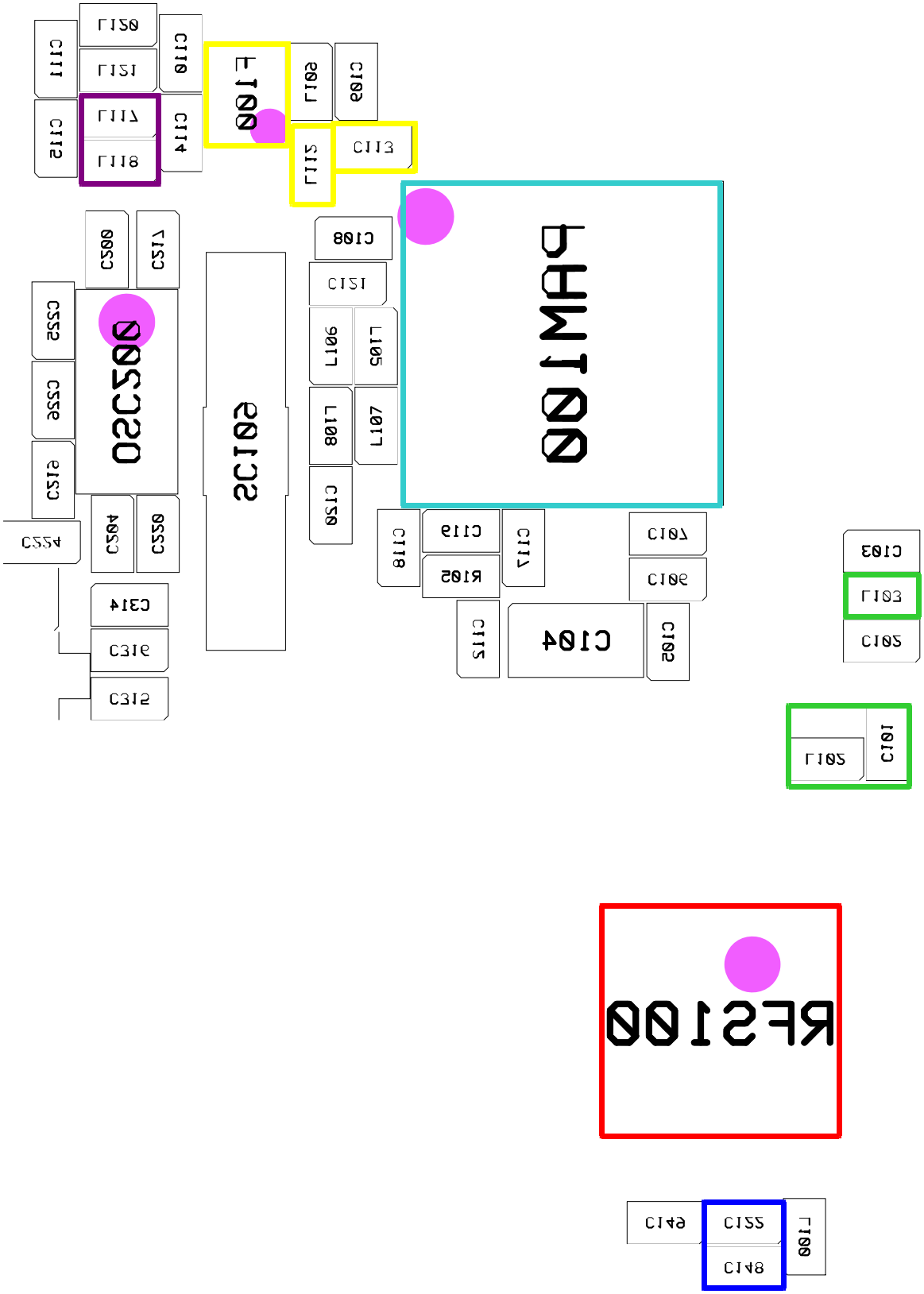

Confidential and proprietary-the contents in this service guide subject to change without prior notice.
Distribution, transmission, or infringement of any content or data from this document without Samsung's written authorization is strictly prohibited.

8-3-2-4. DCS Transmitter

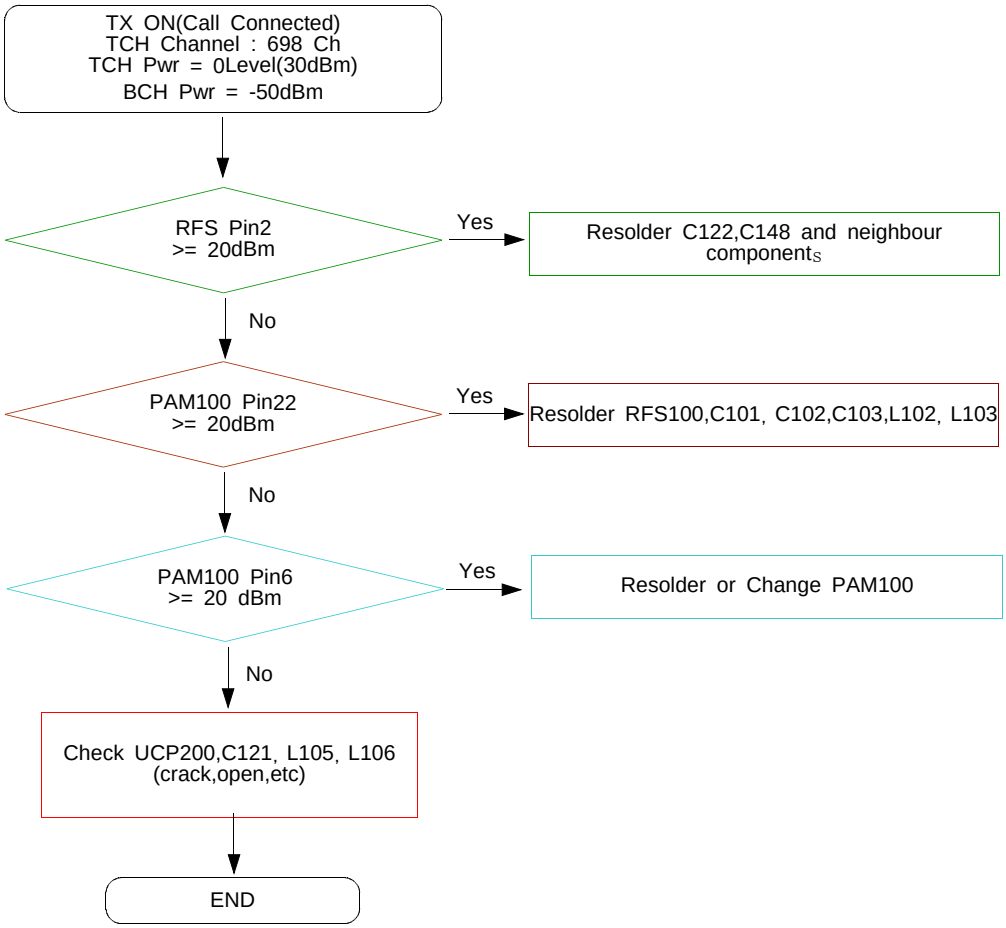

Confidential and proprietary-the contents in this service guide subject to change without prior notice.
Distribution, transmission, or infringement of any content or data from this document without Samsung's written authorization is strictly prohibited.

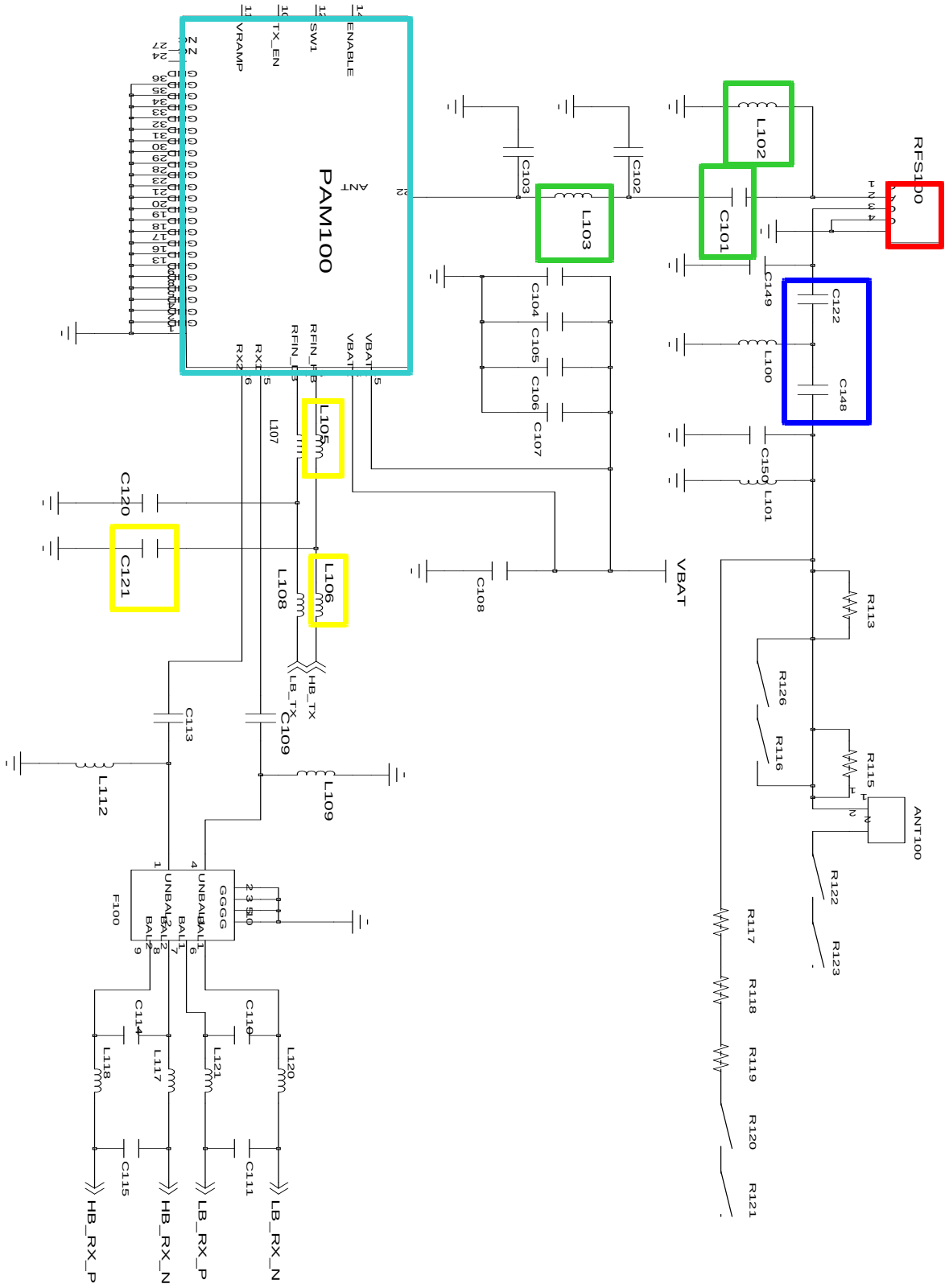

Confidential and proprietary-the contents in this service guide subject to change without prior notice.
Distribution, transmission, or infringement of any content or data from this document without Samsung's written authorization is strictly prohibited.

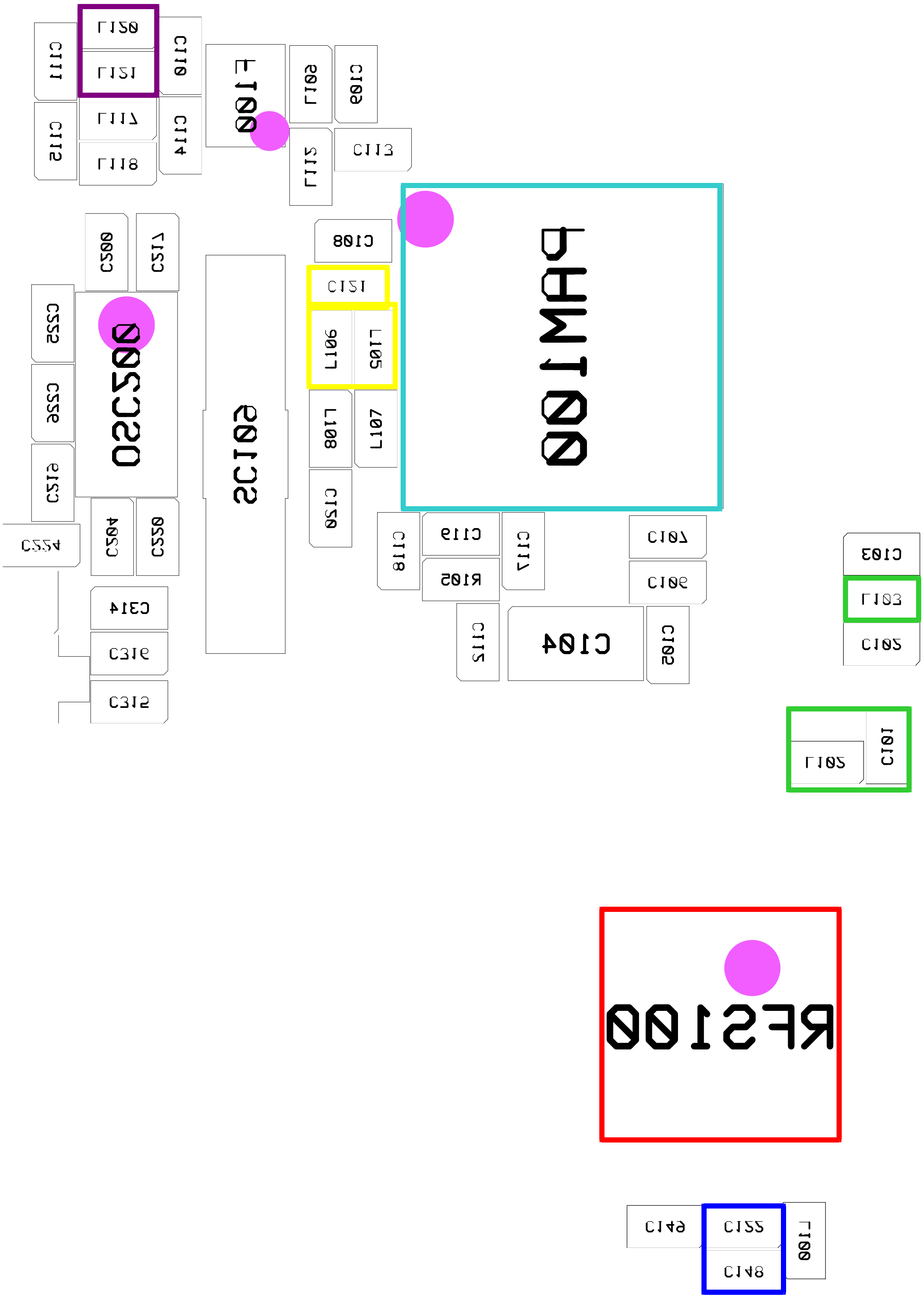

Confidential and proprietary-the contents in this service guide subject to change without prior notice.
Distribution, transmission, or infringement of any content or data from this document without Samsung's written authorization is strictly prohibited.

8-3-2-5. FM RADIO

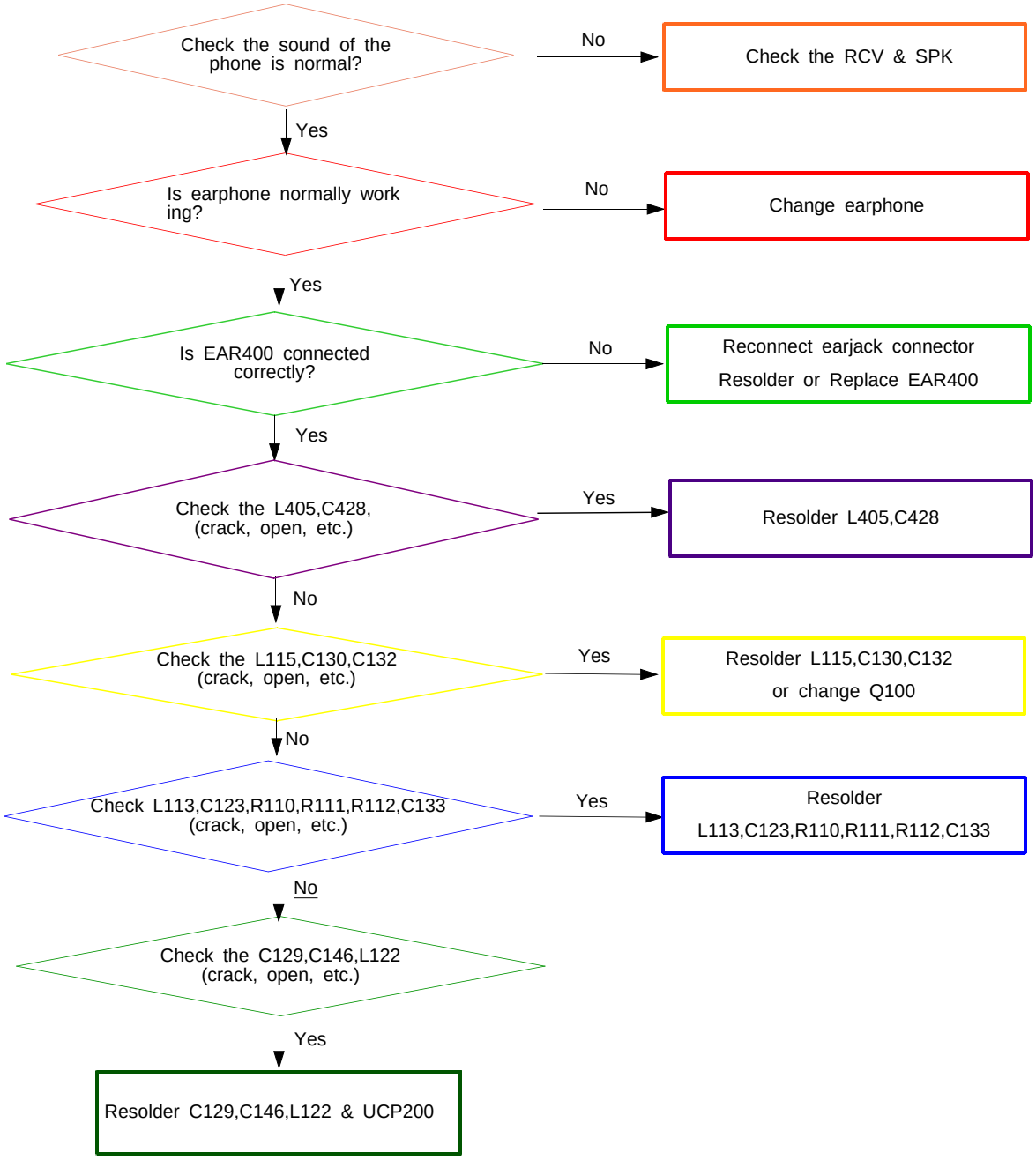

Confidential and proprietary-the contents in this service guide subject to change without prior notice.
Distribution, transmission, or infringement of any content or data from this document without Samsung's written authorization is strictly prohibited.

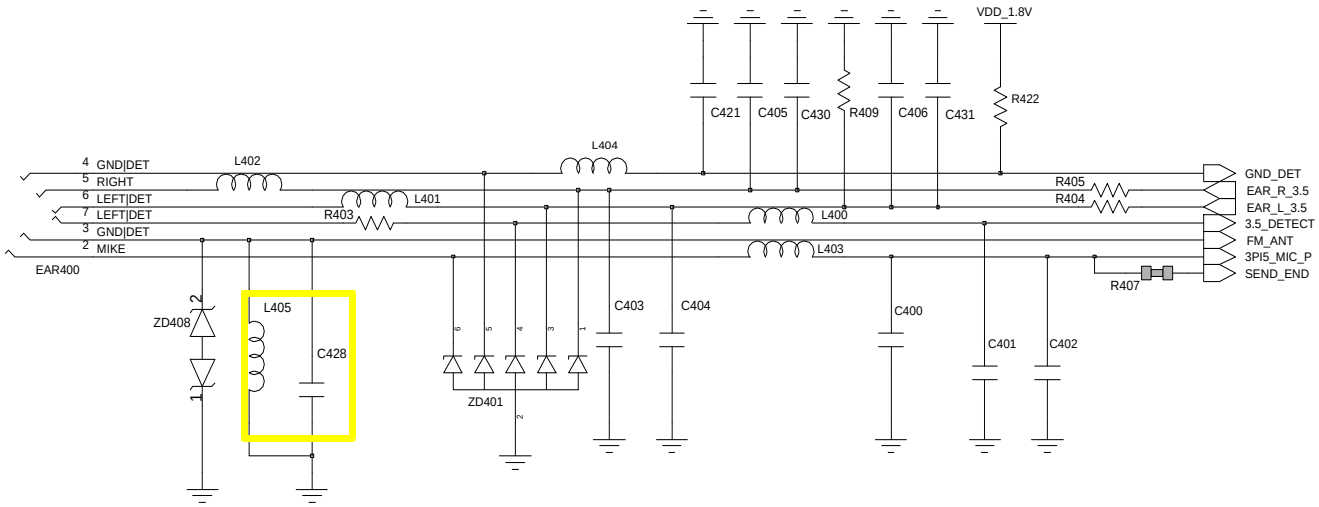

3.5 pi EAR JACK

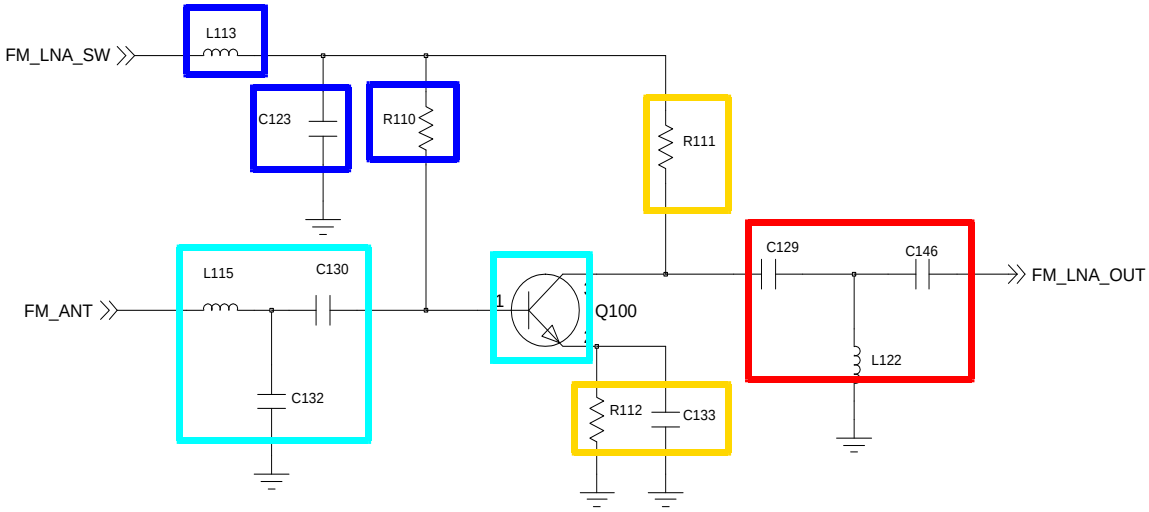

FMR_LNA

Confidential and proprietary-the contents in this service guide subject to change without prior notice.
Distribution, transmission, or infringement of any content or data from this document without Samsung's written authorization is strictly prohibited.

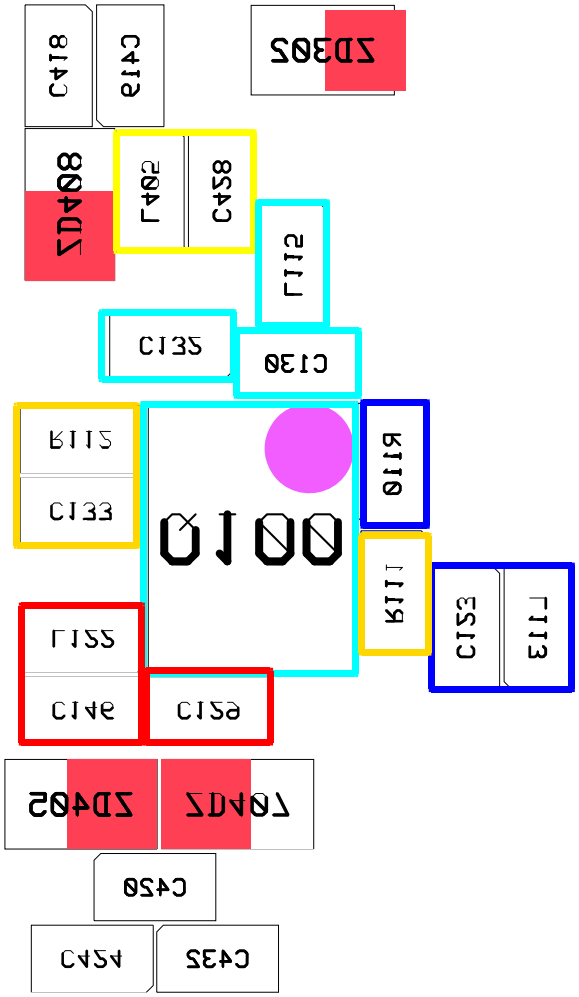

Confidential and proprietary-the contents in this service guide subject to change without prior notice.
Distribution, transmission, or infringement of any content or data from this document without Samsung's written authorization is strictly prohibited.

8-3-2-6. BLUETOOTH

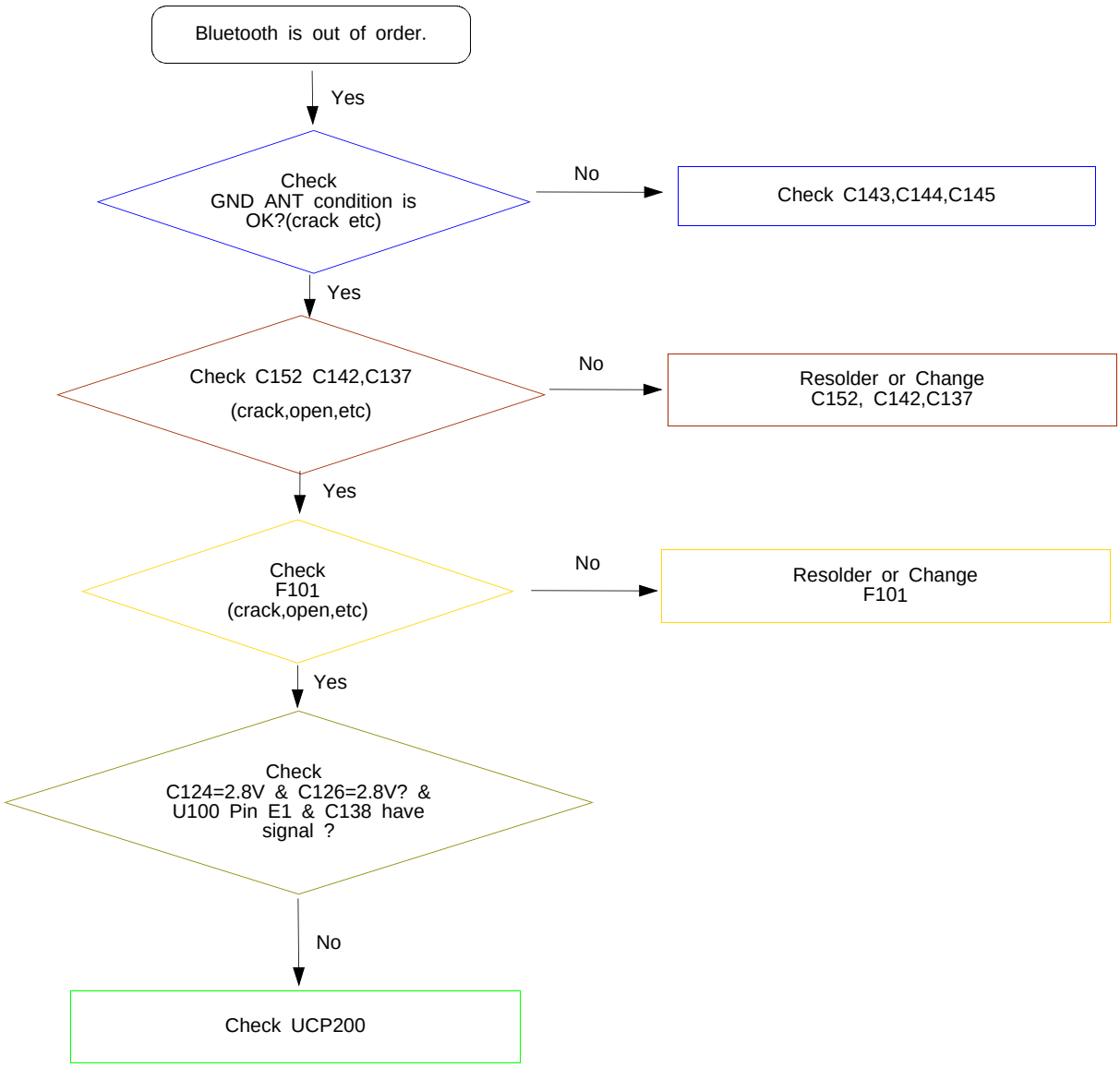

Confidential and proprietary-the contents in this service guide subject to change without prior notice.
Distribution, transmission, or infringement of any content or data from this document without Samsung's written authorization is strictly prohibited.

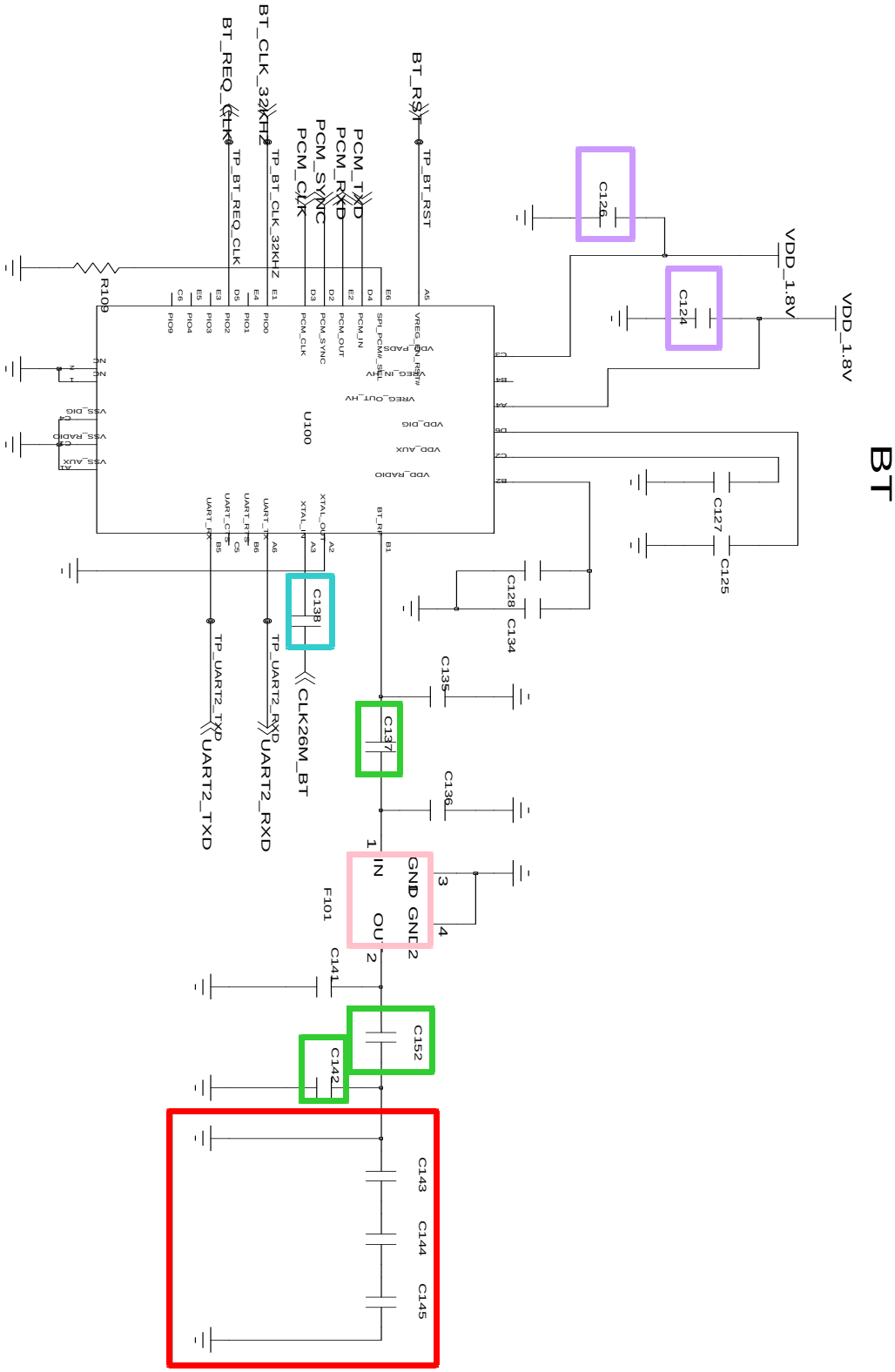

Confidential and proprietary-the contents in this service guide subject to change without prior notice.
Distribution, transmission, or infringement of any content or data from this document without Samsung's written authorization is strictly prohibited.

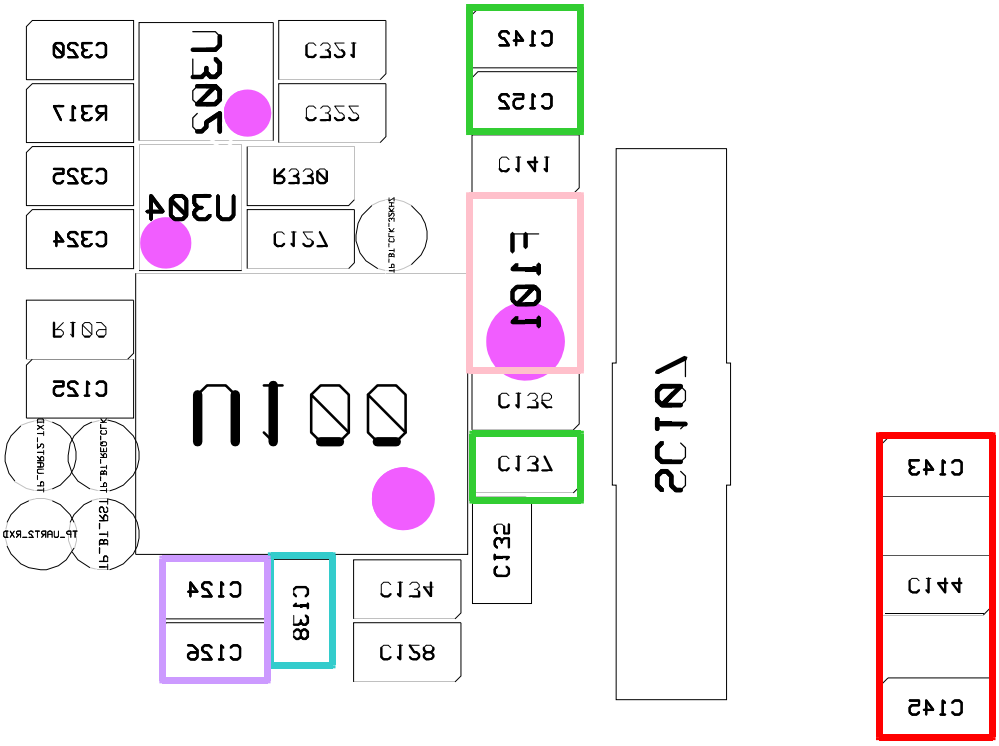

Confidential and proprietary-the contents in this service guide subject to change without prior notice.
Distribution, transmission, or infringement of any content or data from this document without Samsung's written authorization is strictly prohibited.

NC Point(Top View)

● : NC

UCP200

	A	B	C	D	E	F	G	H	J	K	L	M	N	P	R	T		
16	NC1	FE1	RX12X	RX12	RX34X	RX34	TMS	TCK	TDI	TRIG_IN	F32K	EPP	LSN	VBATSP	VDDNEG	NC2		16
15	TX1	TX2	VSSRF			VSSLO		TRST_n	TDO	FSYS_EN	OSC32K	EPN	LSP	VSSLSR	CP2	CP1		15
14	FE2	VDDTRX	VDET			VSSTRX	VBAT				VSSMS			VDD1V8CP	HSL	HSR		14
13	VRAMP	PABS	PABIAS			VSSRX	VDDRF2	VDDMS	MON1		RESET_N			VUMIC	MICN2	MICP2		13
12	VDDMMD	VDDTDC	PAEN		VSSDCO	VSSXO	VSSDIG	SWIF_TXRX	MON2	DMINUS			M0	VMIC	MICN1	MICP1		12
11	XO	XOX			VDDXO	FSYS2	FSYS1	DIGuP1	DIGuP_CLK	DPLUS		FMRINX	VDD_FMR	AGND	M2	M1		11
10	KP_IN1	KP_IN2	KP_IN3	KP_IN4	KP_IN5	KP_OUT5	DIGuP2	VRF1	VDD1V81	LEDFBP	VRTC	FMRIN		VPMU	ACD	VREF		10
9	KP_IN0	KP_OUT1	KP_OUT2	KP_OUT0	KP_OUT3	VDDFS	VDDIO1	VSSCORE2	VSSCORE3	LEDDRV	VUSB		ANAMON	ONOFF	VSS_PMU			9
8	I2S1_RX	I2S1_TX	I2S1_WA0	I2S1_CLK0	CIF_D7	VSSCORE1	VDDCORE		USIF2_TXD_MTSR	USIF2_CTS_n	VCORE	LEDFBN	VSIM	VBAT_PMU	VAUX	VSS_VIB	VIB		8
7	CIF_D8	CIF_D4	CIF_D6		CIF_VSYNC	CIF_HSYNC	CIF_PD		USIF2_RTS_n	USIF2_RXD_MRST	VDDIO2	VMMC	CS		VDD_SD1	SD1SW	VSS_SD1		7
6	CIF_D0	CIF_D1	CIF_D5		CIF_RESET	CLKOUT2	CIF_PCLK	MMCI_DAT1		WAIT_n	VSHNT	SENSEN	SENSEP			CSB	SD1_FB		6
5	I2C_SDA	I2C_SCL	CIF_D2				MMCI_DAT2			MMCI_DAT3				A/D13		VDD_EBU	VCHG		5
4	CLKOUT0	T2IN	MON8	DIF_RD		DIF_CS1	CC_RST		A19	A17	CS0_n	A/D9		A24	A20	WR_n	VDDCHG		4
3	USIF1_RTS_n	USIF1_RXD_MRST	DIF_WR	DIF_D8	DIF_CD	DIF_D7	CC_IO	MMCI_DAT0		A22	A/D0	A/D11	CS1_n	A/D4	A/D15	ADV_n	A23		3
2	USIF1_TXD_MTSR	USIF1_CTS_n	DIF_D4	DIF_RESET	DIF_D8	DIF_D2	CC_CLK	MMCI_CLK		A18	A/D1	A/D10	A/D5	A/D12	A/D7	A21	EFCLKO		2
1	NC3	DIF_D6	DIF_D5	DIF_D1	DIF_D0	DIF_HD	DIF_VD	MMC_CMD		RD_n	A/D8	A/D2	A/D3	A/D6	A/D14	A16	NC4		1
	A	B	C	D	E	F	G	H	J	K	L	M	N	P	R	T		

Confidential and proprietary-the contents in this service guide subject to change without prior notice.
Distribution, transmission, or infringement of any content or data from this document without Samsung's written authorization is strictly prohibited.

U200

	123			4	5678				9	10	11	12	13	14
A	NC													NC
B														
C			NC	DNU			/LBc	/UBc			A24r	NC		
D			RDYr /WAITc	A21rc	VSSrc	CLKrc	VCCrc	/WErc	VPPr	A19rc	A17rc	A22rc		
E			VCCQrc	A16rc	A20rc	/AVDrc	A23r	/RESETrc	/WPr	A18rc	/CEr	VSSQrc		
F			VSSrc	ADQ7rc	ADQ6rc	ADQ13rc	ADQ12rc	ADQ3rc	ADQ2rc	ADQ9rc	ADQ8rc	/OErc		
G			ADQ15rc	ADQ14rc	VSSQrc	ADQ5rc	ADQ4rc	ADQ11rc	ADQ10rc	VCCQrc	ADQ1rc	ADQ0rc		
H			NC	VCCrc			/CSc	CREc			DNU	NC		
J														
K	NC													NC

Confidential and proprietary-the contents in this service guide subject to change without prior notice.
Distribution, transmission, or infringement of any content or data from this document without Samsung's written authorization is strictly prohibited.